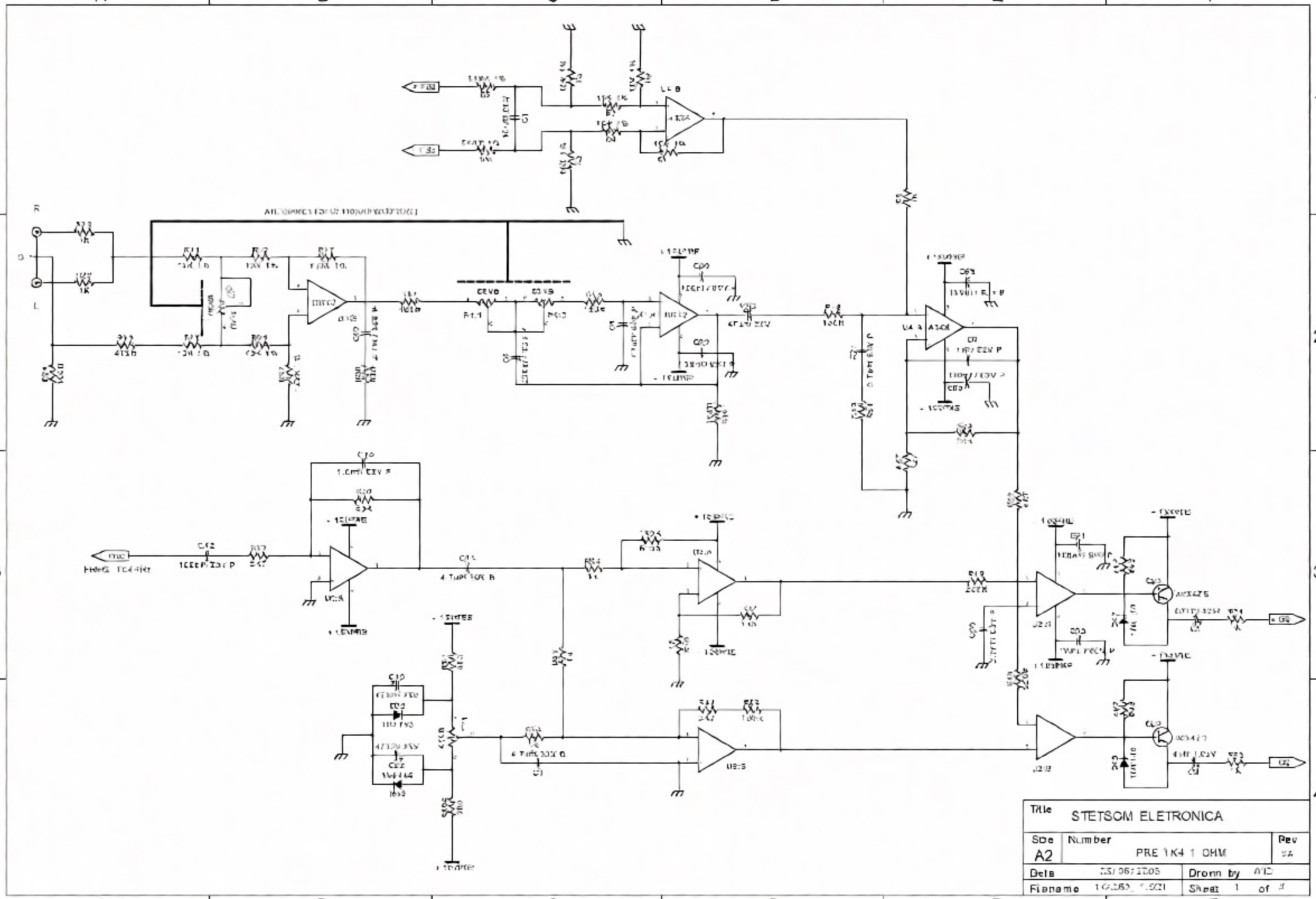
Title
STETSOM ELETRONICA
Size
A2
Number
PRE 1K4 1 OHM
Rev
Date
Drawn by
Filename
Sheet
of