## CONTENTS


| SCHEMATIC NAME | SHEET |
|---|---|
| 01. COVER | 1 |
| 02. Block Diagram | 2 |
| 03. System Power | 3 |
| 04. Peripheral | 4 |
| 05. Video interface/YPbPr | 5 |
| 06. Tuner In | 6 |
| 07. HDMI Input | 7 |
| 08. DDR3x2 | 8 |
| 09. VCCK&DVSS&VCCIO | 9 |
| 10. Ethernet/GPIO/ServAD | 10 |
| 11. Audio AMP | 11 |
| 12. USB/Wifi interface | 12 |
| 13. LVDS | 13 |
| 14. Factory RS232 | 14 |


## REVISION HISTORY

| Date | Author | Ver | Reviser reason | FN |
|---|---|---|---|---|
| 2015/11/18 | Lucas | A | First released. (MT5582) | |
| 2015/08/03 | Eddie | C | Page8. C1047 & R4155 Delete.<br>Page9. R1093 / R1096 / Q111 NC.<br>Page7. TP98 Delete.<br>Page7. Net "DETECT_YPBPRn" change GPIO from ADIN5 to OPCTRL7.<br>Page11. Add L103 Common Choke for WIFI.<br>Page12. Add C4082 & C4083 for EMI.<br>Page12. Add C4171 / C4172 / C4173_1NF for EMI.<br>Page12. Add C4174 / C4175 / C4176_1NF for EMI.<br>Page12. Add C4182 & C4183_100NF for EMI.<br>Page04. C747 & C748 from NC to mount for EMI.<br>Page05. Add R4179 & R4180_0R for EMI.<br>Page05. Add C4179 & C4180_1NF for EMI.<br>Page13. C110 & C115 from NC to Mount for EMI.<br>Page09. Add C4181_120PF for EMI.<br>Page10. Delete TP49 for EMI. | |
| 2015/08/04 | Eddie | C | Page05. Delete R4179 & R4180_0R<br>Page13. Add TU101 Pin13 to GND. | |
| 2015/09/26 | Eddie | D | Page12. Add ESD ZD702/ZD703/ZD704/ZD705 | |

| | | | | | |
|---|---|---|---|---|---|
| T P V ( Top Victory Electronics Co., Ltd. ) | | OEM MODEL | 2K17 PHP | Size | A |
| 線路圖編號 | 715G8251-M0A-B00-0040 | TPV MODEL | <Doc> | Rev | A |
| Key Component | 01_COVER | PCB NAME | | 備註 | <備註> |
| Date | Tuesday, November 15, 2016 | Sheet | 1 of 15 | | |

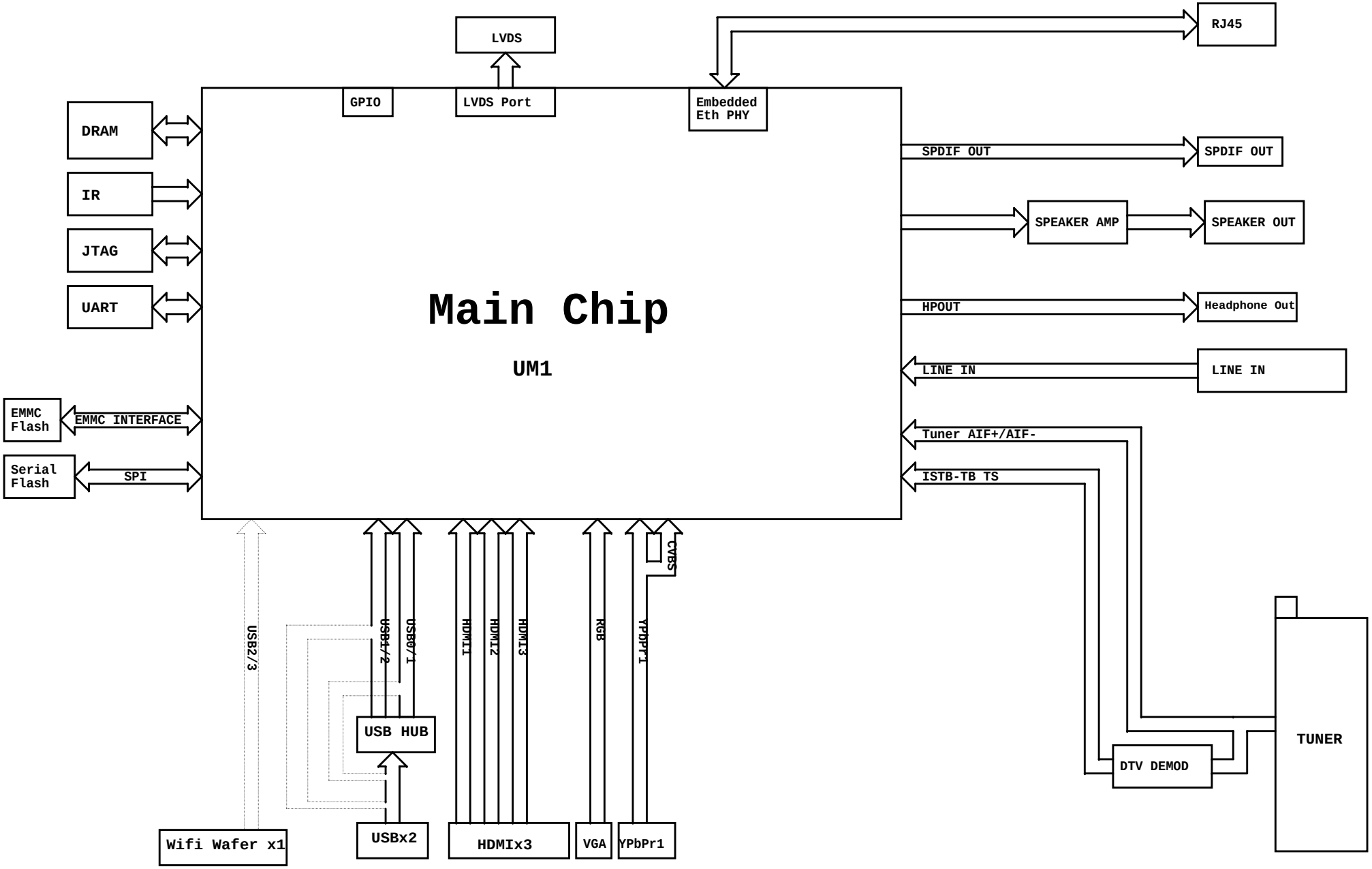


| | | | | | |
|---|---|---|---|---|---|
| TPV (Top Victory Electronics Co., Ltd.) | | OEM MODEL | 2K17 PHP | Size | C |
| 線路圖編號 | 715G8251-M0A-B00-0040 | TPV MODEL | <Doc> | Rev | A |
| Key Component | 02_BLOCK DIAGRAM | PCB NAME | | 備註 | <備註> |
| Date | Tuesday, November 15, 2016 | Sheet | 2 of 15 | | |

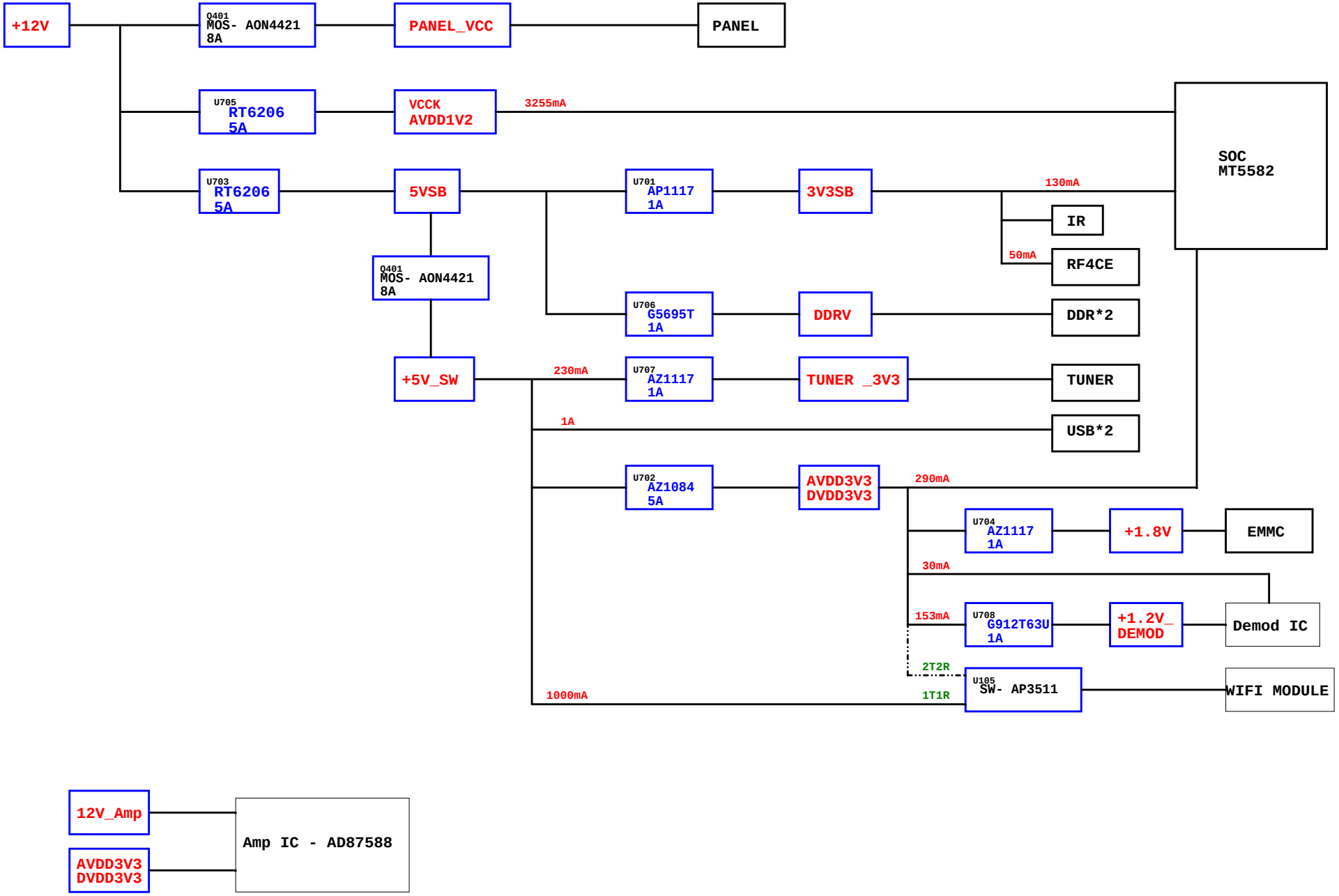





| | | | | | |
|---|---|---|---|---|---|
| TPV (Top Victory Electronics Co., Ltd.) | | OEM MODEL | 2K17 PHP | Size | C |
| 線路圖編號 | 715G8251-M0A-B00-0040 | TPV MODEL | <Doc> | Rev | A |
| Key Component | 03_POWER_TREE | PCB NAME | | 備註 | <備註> |
| Date | Tuesday, November 15, 2016 | Sheet | 3 of 15 | | |

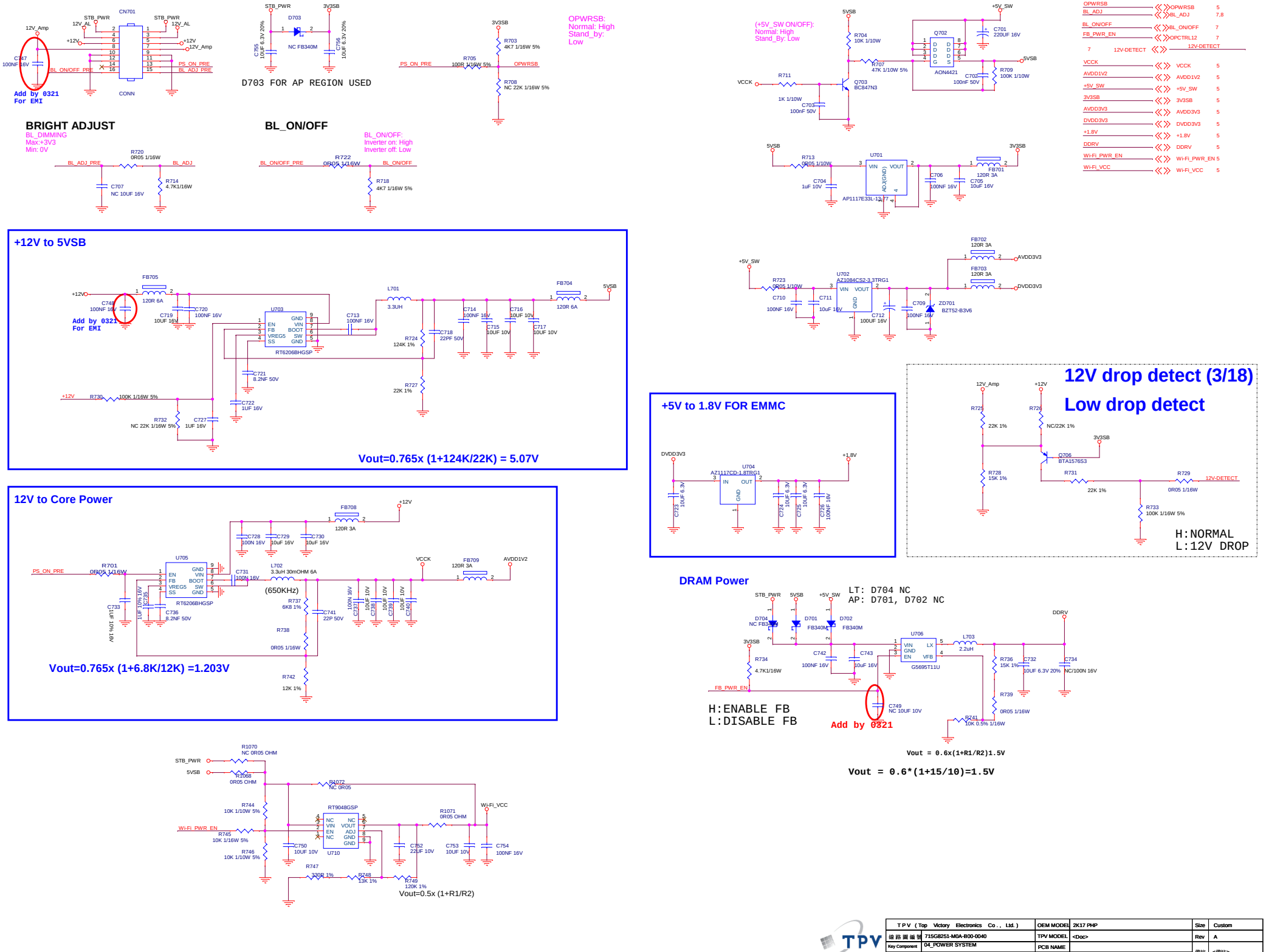


| | | | |
|---|---|---|---|
| TPV (Top Victory Electronics Co., Ltd.) | OEM MODEL | 2K17 PHP | Size Custom |
| 線路圖編號 715G8251-M0A-B00-0040 | TPV MODEL | <Doc> | Rev A |
| Key Component 04_POWER SYSTEM | PCB NAME | | 備註 <備註> |
| Date Tuesday, November 15, 2016 | Sheet 4 of 15 | | |

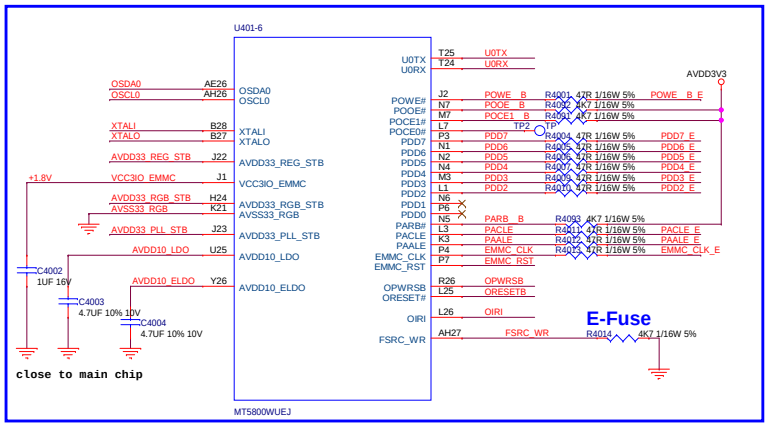


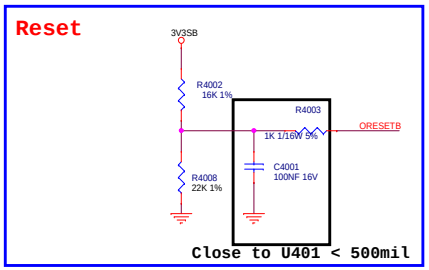


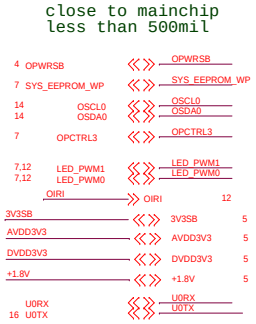


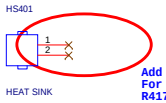


Add by 2016-0803
For EMI
R4179 & R4180_Delete 2016-0804

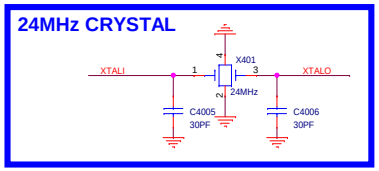


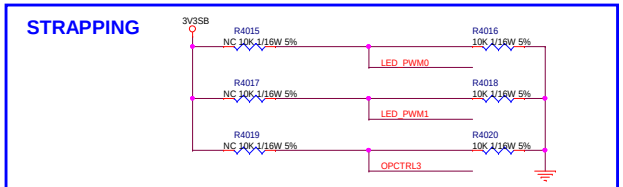


| STRAPPING | LED_PWM0 | LED_PWM1 | OPCTRL3 |
|---|---|---|---|
| ICE mode + 24M + serial boot | 0 | 0 | 1 |
| ICE moce + 24M + ROM to 60bit ECC Nand boot | 0 | 1 | 0 |
| ICE moce + 24M + ROM to eMMC boot from eMMC pins(share pins w/s NAND) | 0 | 0 | 0 |

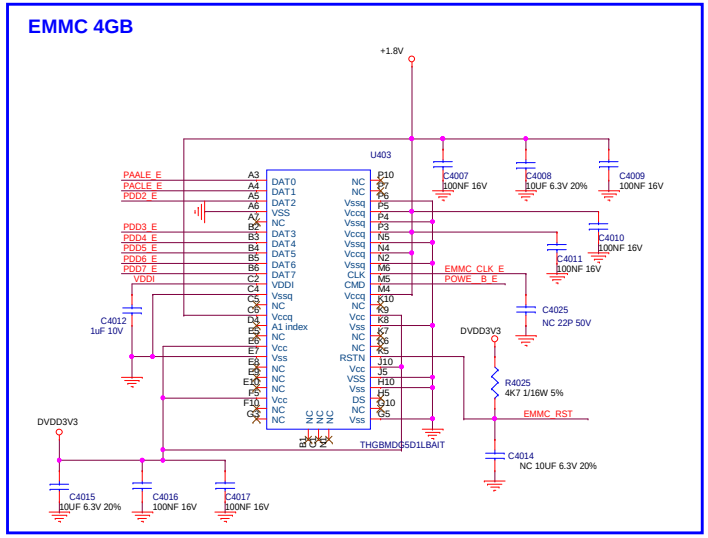


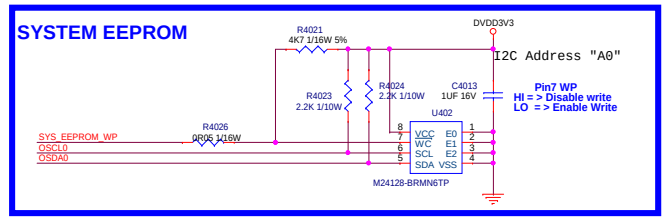


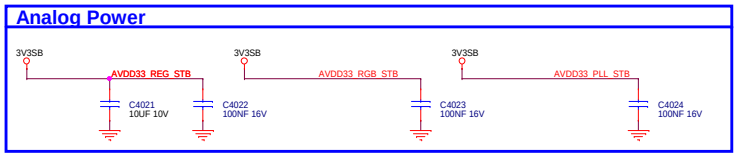


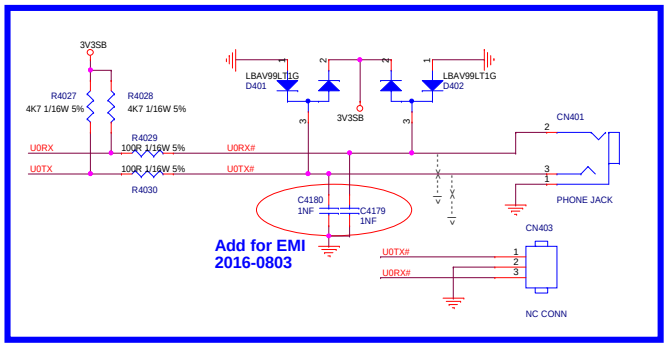


| | | | | | |
|---|---|---|---|---|---|
| T P V (Top Victory Electronics Co., Ltd.) | | OEM MODEL | 2K17 PHP | Size | C |
| 線路圖編號 | 715G8251-M0A-B00-0040 | TPV MODEL | <Doc> | Rev | A |
| Key Component | 05_PERIPHERAL | PCB NAME | | 備註 | <備註> |
| Date | Tuesday, November 15, 2016 | Sheet | 5 of 15 | | |

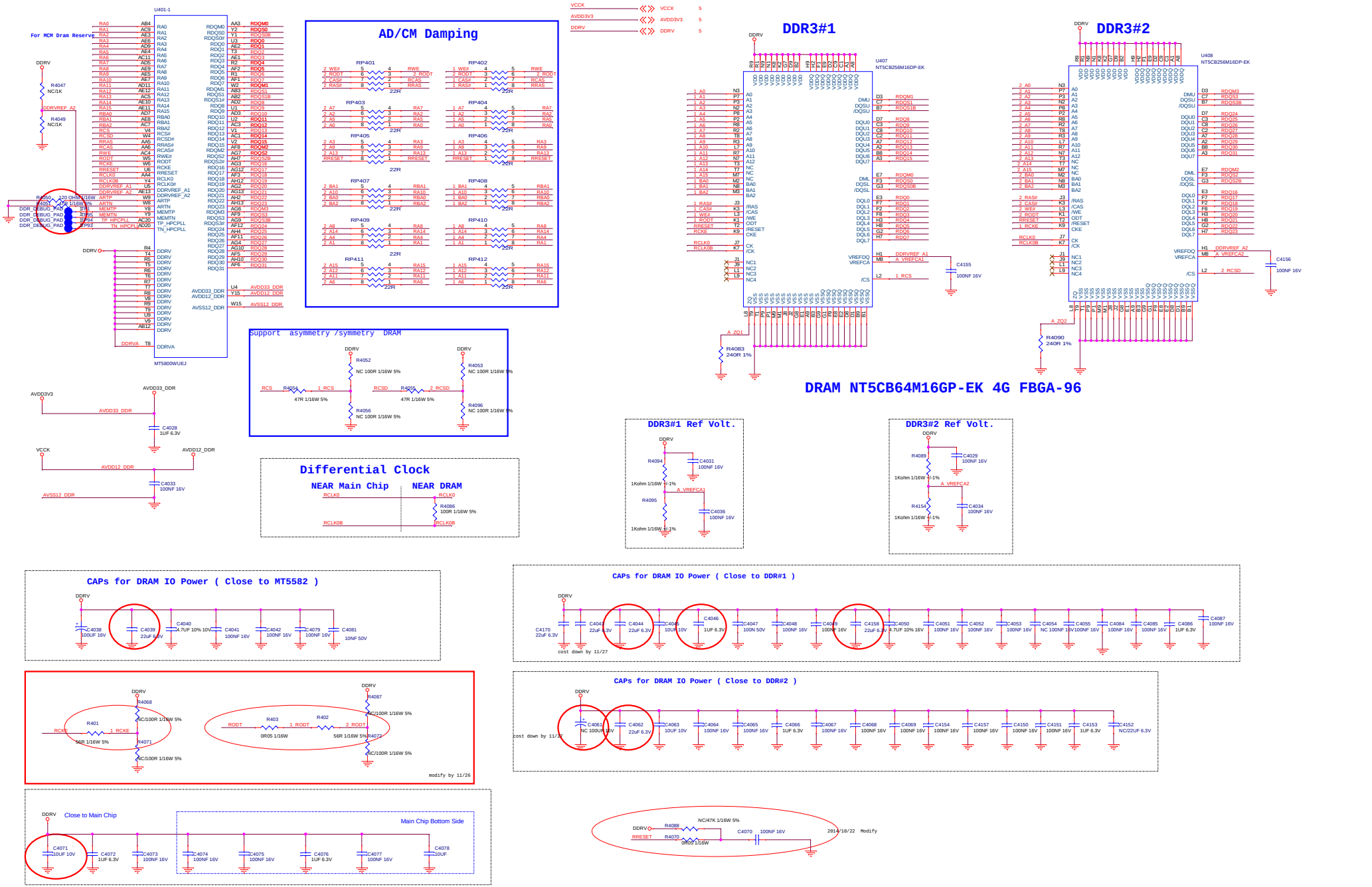


| | | | |
|---|---|---|---|
| T P V (Top Victory Electronics Co., Ltd.) | OEM MODEL | 2K17 PHP | Size Custom |
| 緯創資通股份有限公司 | 715G8251-M0A-B00-0040 | TPV MODEL <Doc> | Rev A |
| Key Component | 06_DRAM | PCB NAME | 備註 <備註> |
| Date Tuesday, November 15, 2016 | Sheet 6 of 15 | | |

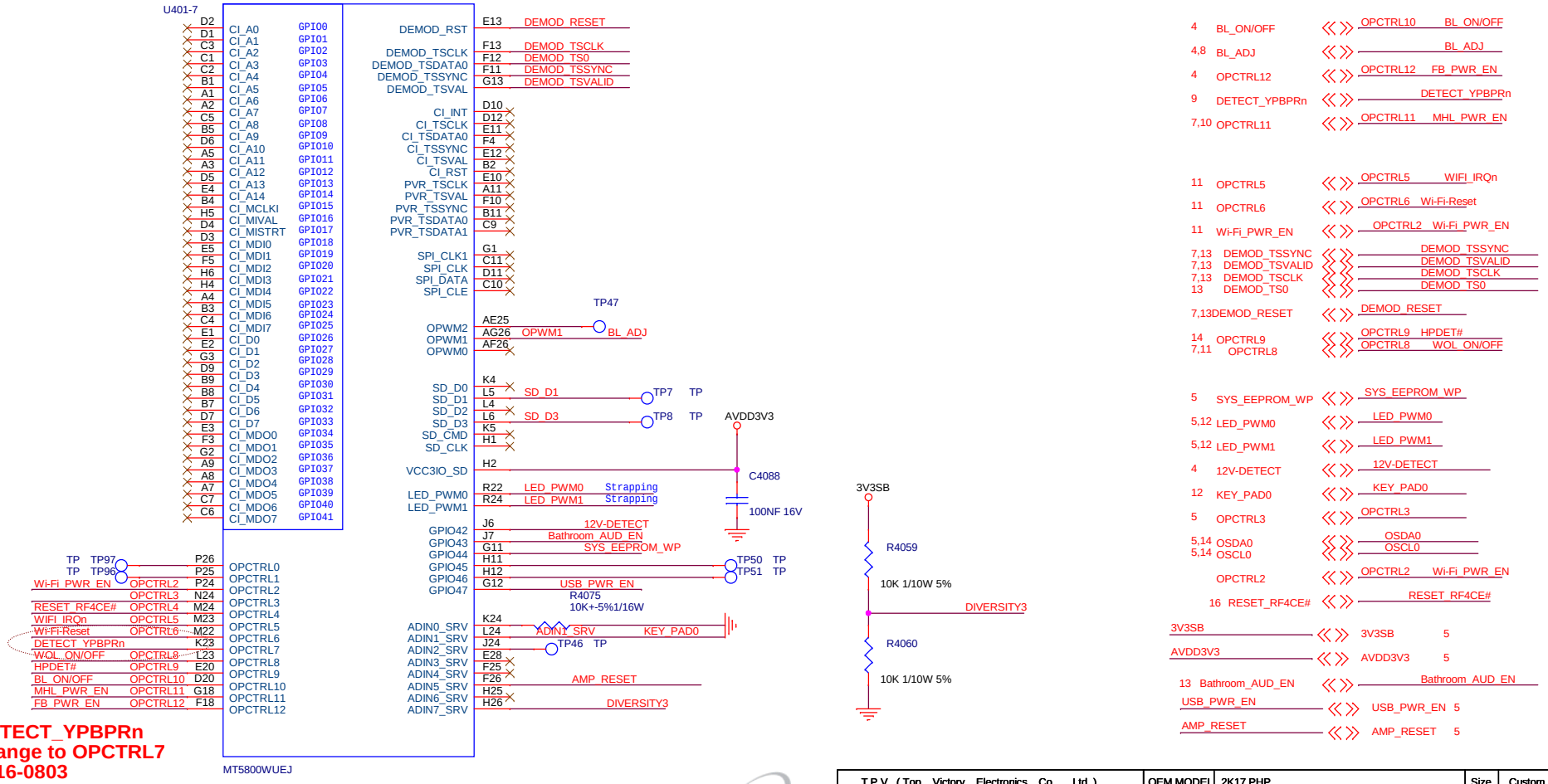
U401-7
MT5800WUEJ
DETECT_YPBPRn
change to OPCTRL7
2016-0803
TP47
TP7
TP8
TP50
TP51
TP46
TP97
TP96
AVDD3V3
C4088
100NF 16V
3V3SB
R4059
10K 1/10W 5%
R4060
10K 1/10W 5%
R4075
10K+-5%1/16W
DIVERSITY3
BL_ON/OFF
BL_ADJ
OPCTRL12
DETECT_YPBPRn
OPCTRL11
OPCTRL5
OPCTRL6
Wi-Fi_PWR_EN
DEMOD_TSSYNC
DEMOD_TSVALID
DEMOD_TSCLK
DEMOD_TS0
DEMOD_RESET
OPCTRL9
OPCTRL8
SYS_EEPROM_WP
LED_PWM0
LED_PWM1
12V-DETECT
KEY_PAD0
OPCTRL3
OSDA0
OSCL0
OPCTRL2
RESET_RF4CE#
Bathroom_AUD_EN
USB_PWR_EN
AMP_RESET
TPV
TPV (Top Victory Electronics Co., Ltd.)
OEM MODEL
2K17 PHP
Size
Custom
線路圖編號
715G8251-M0A-B00-0040
TPV MODEL
<Doc>
Rev
A
Key Component
07_MII/GPIO
PCB NAME
備註
<備註>
Date
Tuesday, November 15, 2016
Sheet
7 of 15

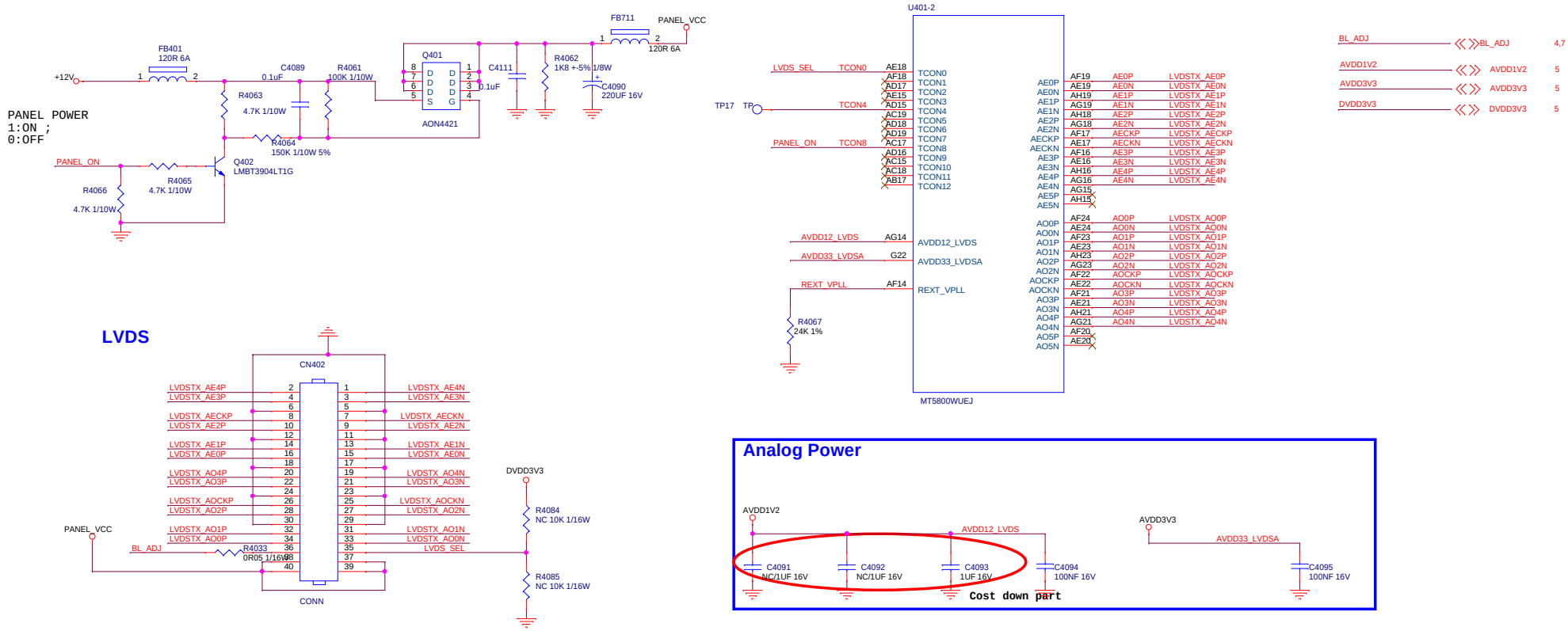


| | | | | | |
|---|---|---|---|---|---|
| TPV (Top Victory Electronics Co., Ltd.) | | OEM MODEL | 2K17 PHP | Size | Custom |
| 線路圖編號 | 715G8251-M0A-B00-0040 | TPV MODEL | <Doc> | Rev | A |
| Key Component | 08_LVDS | PCB NAME | | 備註 | <備註> |
| Date | Tuesday, November 15, 2016 | Sheet | 8 of 15 | | |

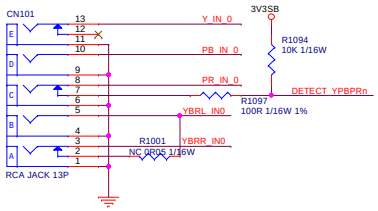


YPbPr for AP 388G078G157ACL
CVBS for LT

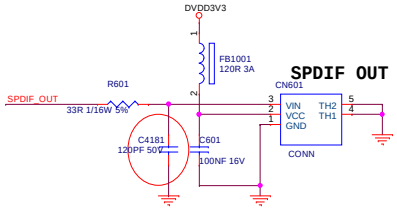


Add for EMI
2016-0803

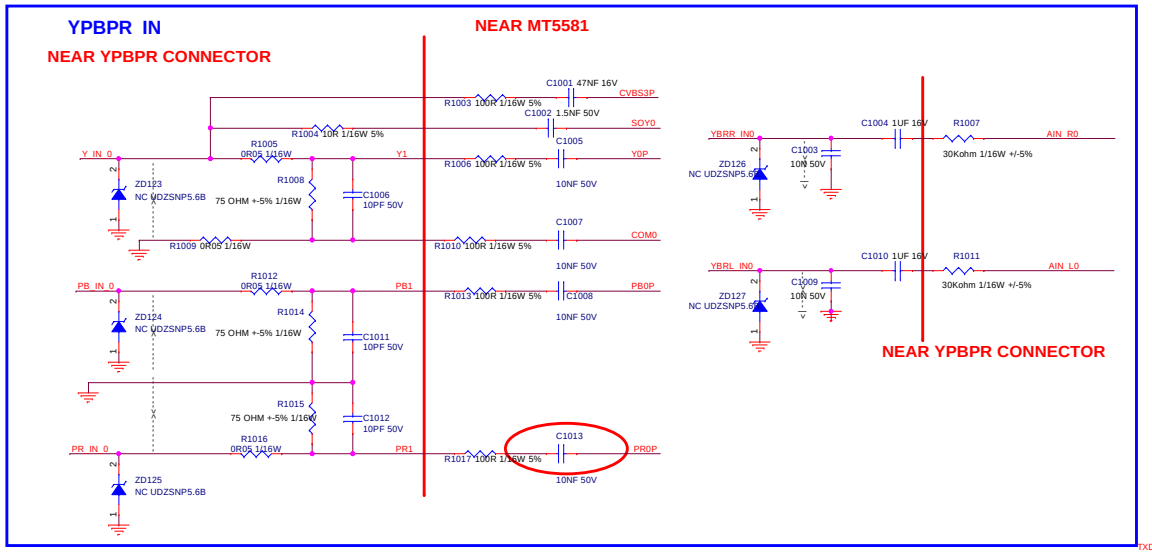


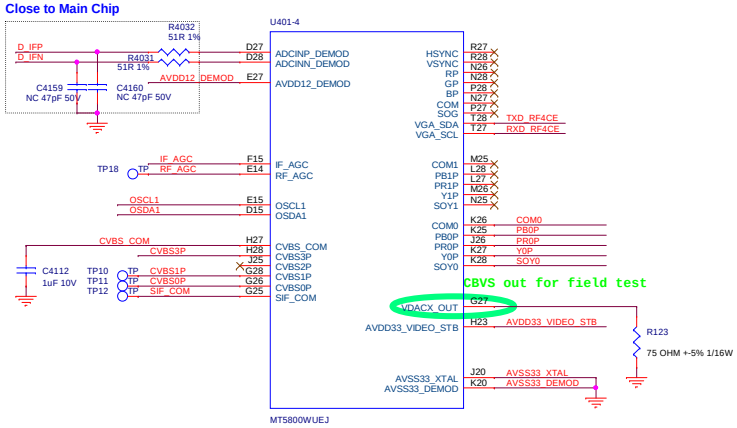


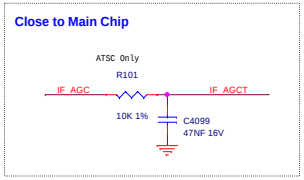


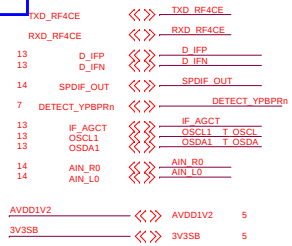


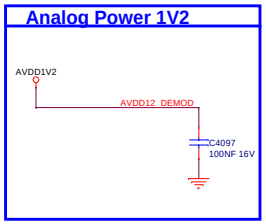


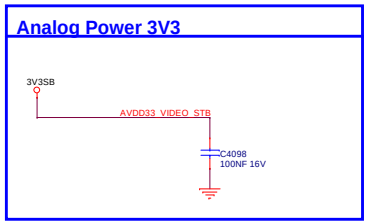


| | | | | | |
|---|---|---|---|---|---|
| T P V (Top Victory Electronics Co., Ltd.) | | OEM MODEL | 2K17 PHP | Size | Custom |
| 線路圖編號 | 715G8251-M0A-B00-0040 | TPV MODEL | <Doc> | Rev | A |
| Key Component | 09_YPbPr/CVBS/SPDIF INTERFACE | PCB NAME | | 備註 | <備註> |
| Date | Tuesday, November 15, 2016 | Sheet | 9 of 15 | | |

## HDMI1+MHL(side)

MHL TMDS impedance:
Zdiff=90ohm,
Zcome=27.5ohm

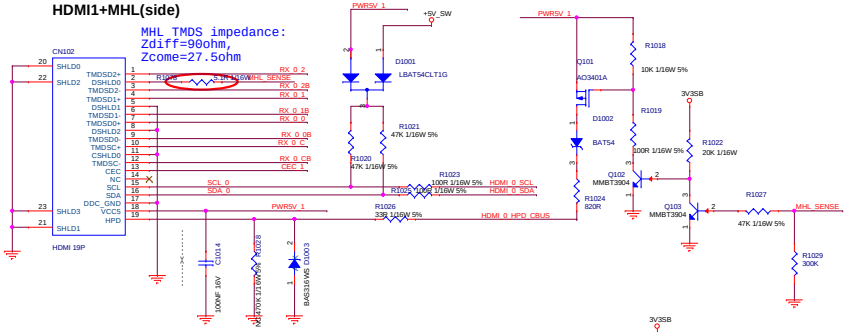


## MHL POWER

**MHL_CD_SENSE:**
**HDMI Mode: Low**
**MHL Mode: High**

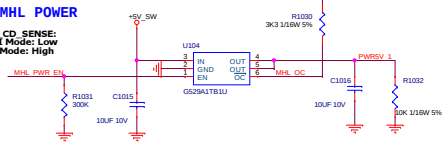


## HDMI2(side)

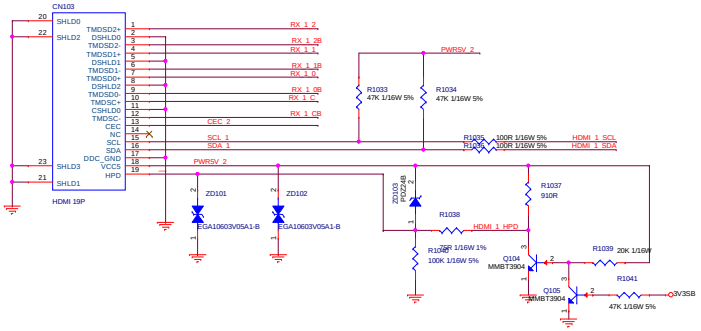


## HDMI3(down)

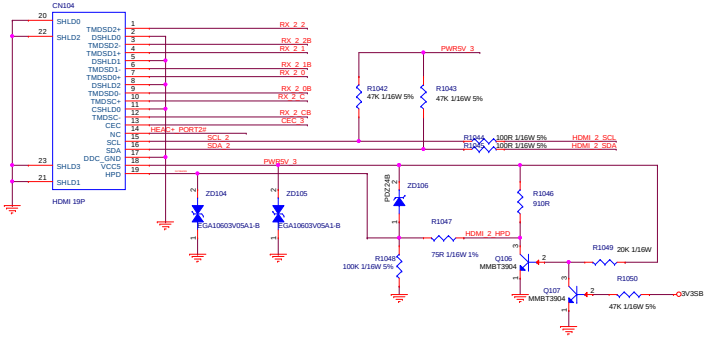


## Analog Power

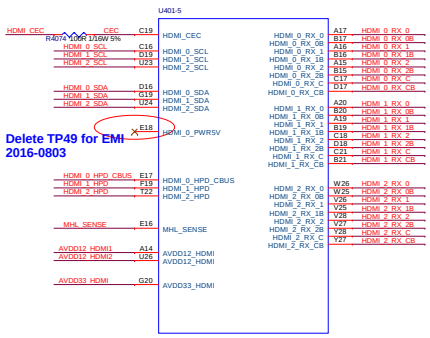


**Delete TP49 for EMI 2016-0803**

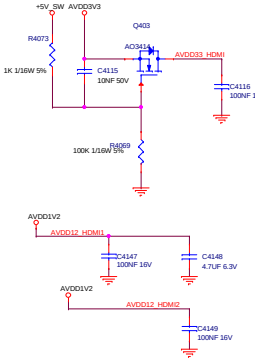


## HDMI-CEC

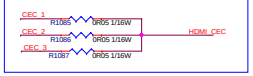


## Audio Return Channel (ARC)

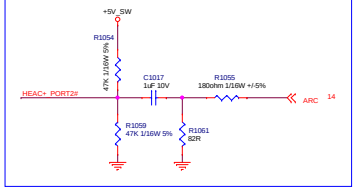


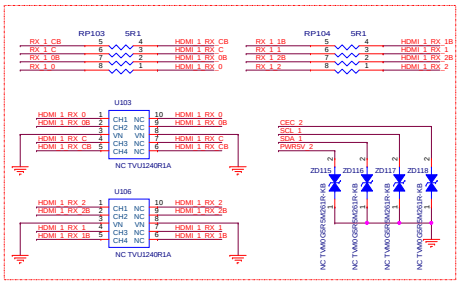


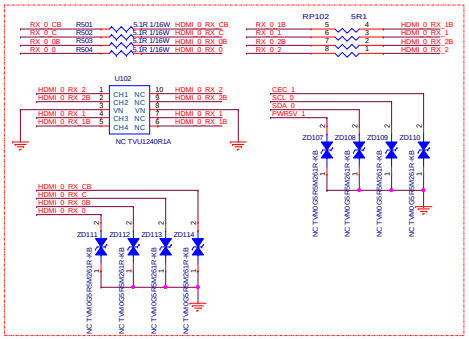


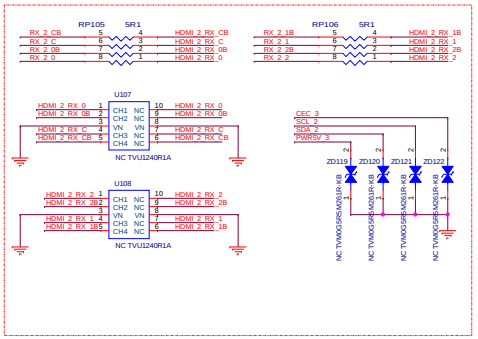


| | | | | | |
|---|---|---|---|---|---|
| T P V (Top Victory Electronics Co., Ltd.) | | OEM MODEL | 2K17 PHP | Size | Custom |
| 機器圖編號 | 715G8251-M0A-B00-0040 | TPV MODEL | <Doc> | Rev | A |
| Key Component | 10_HDMI | PCB NAME | | 備註 | <備註> |
| Date | Tuesday, November 15, 2016 | Sheet | 10 of 15 | | |

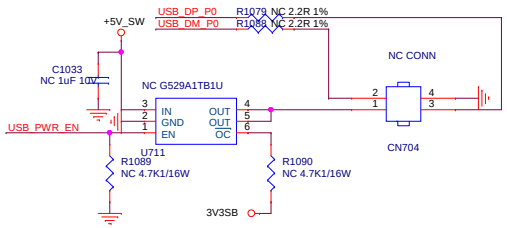


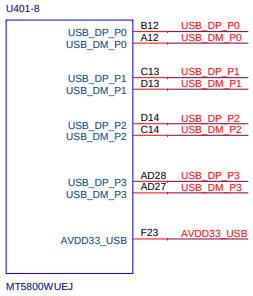


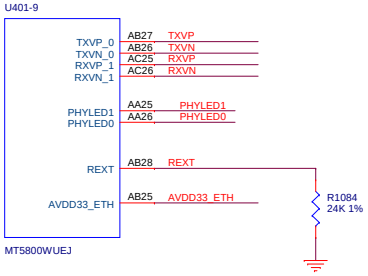


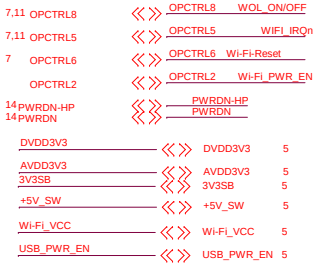


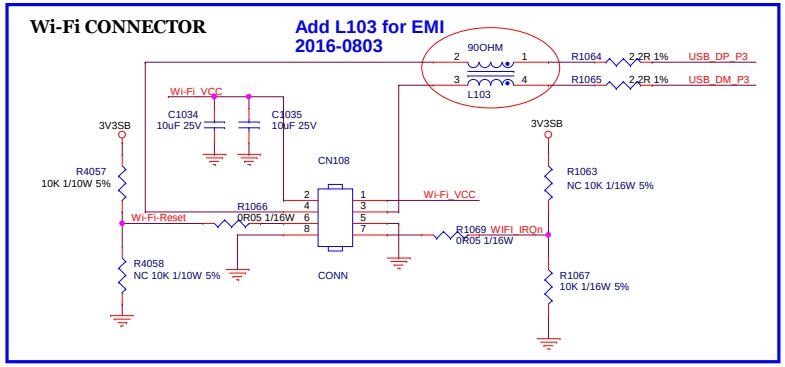


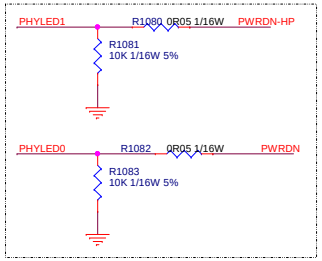


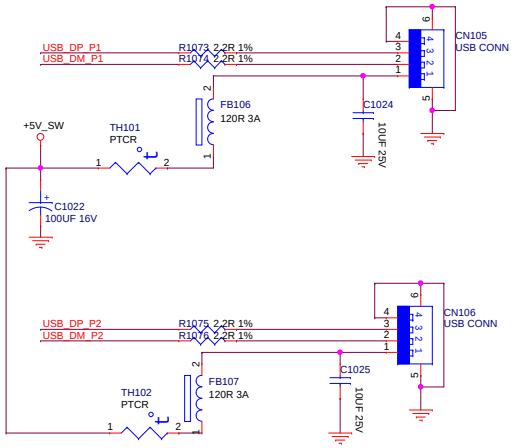


# ETHERNET PHY

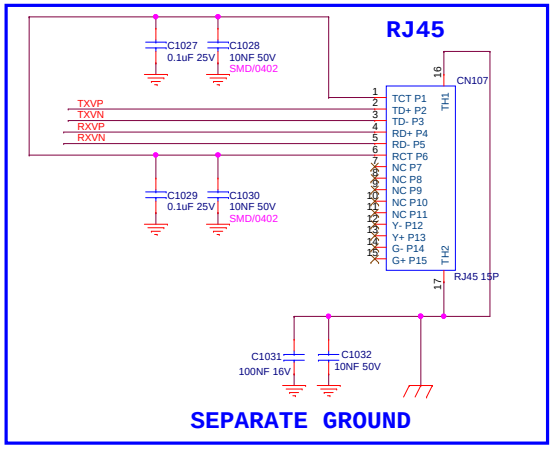


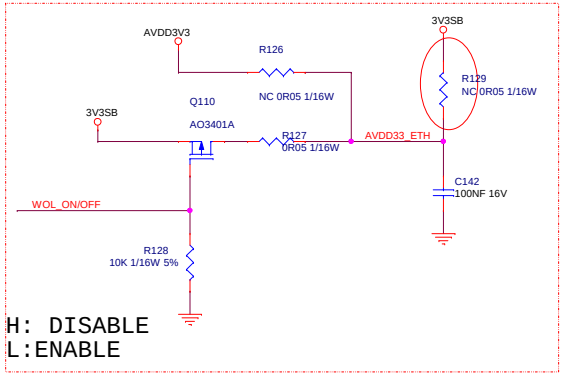


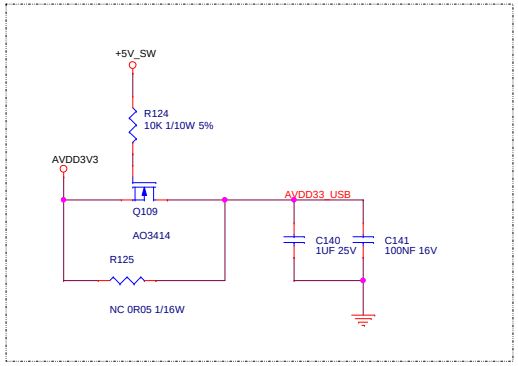


| | | | | | |
|---|---|---|---|---|---|
| TPV (Top Victory Electronics Co., Ltd.) | | OEM MODEL | 2K17 PHP | Size | Custom |
| 線路圖編號 | 715G8251-M0A-B00-0040 | TPV MODEL | <Doc> | Rev | A |
| Key Component | 11_USB/WIFI/RJ45 | PCB NAME | | 備註 | <備註> |
| Date | Tuesday, November 15, 2016 | Sheet | 11 of 15 | | |

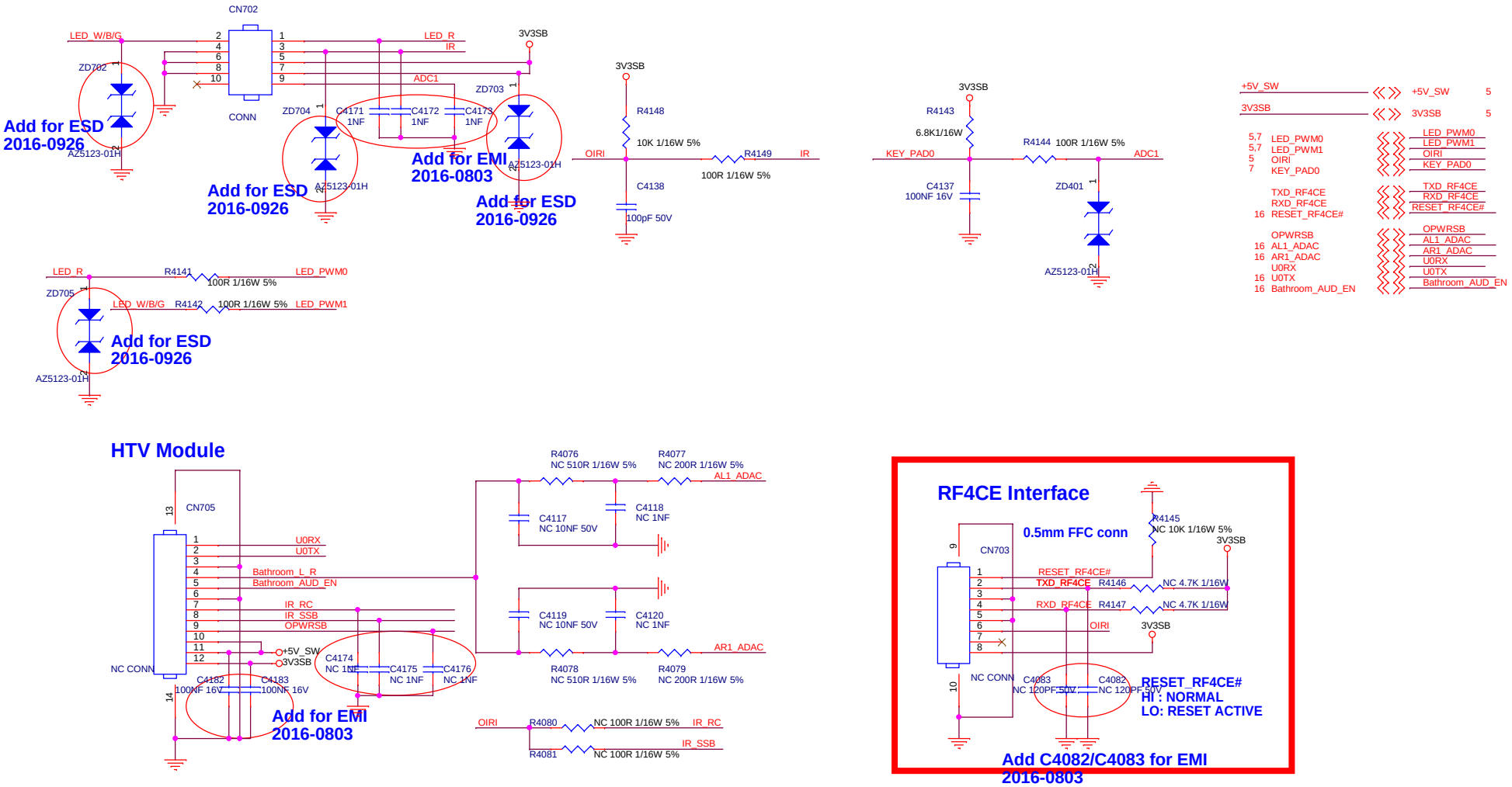


| | | | | | |
|---|---|---|---|---|---|
| T P V (Top Victory Electronics Co., Ltd.) | | OEM MODEL | 2K17 PHP | Size | B |
| 線路圖編號 | 715G8251-M0A-B00-0040 | TPV MODEL | <Doc> | Rev | A |
| Key Component | 12_KEY/IR/RF4CE | PCB NAME | | 備註 | <備註> |
| Date | Tuesday, November 15, 2016 | Sheet | 12 of 15 | | |

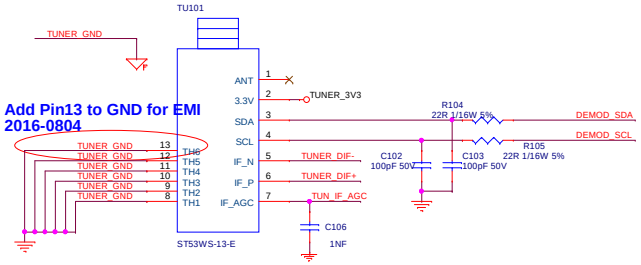


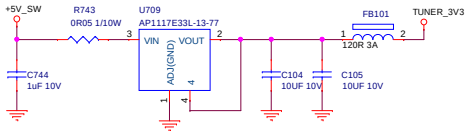


## +5V_SW to +3V3_TUNER

## 1.2V For demodulator

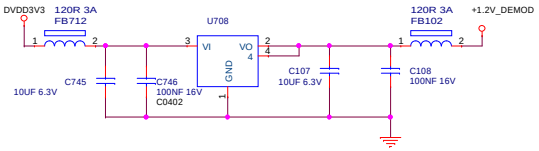


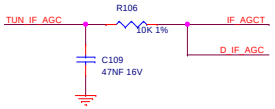


## DEMOD I2C

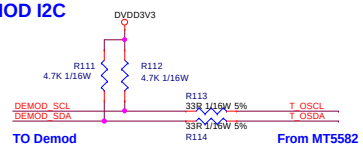


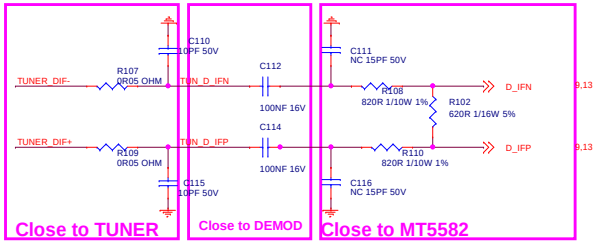


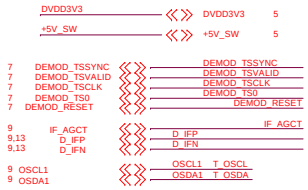


## Demod

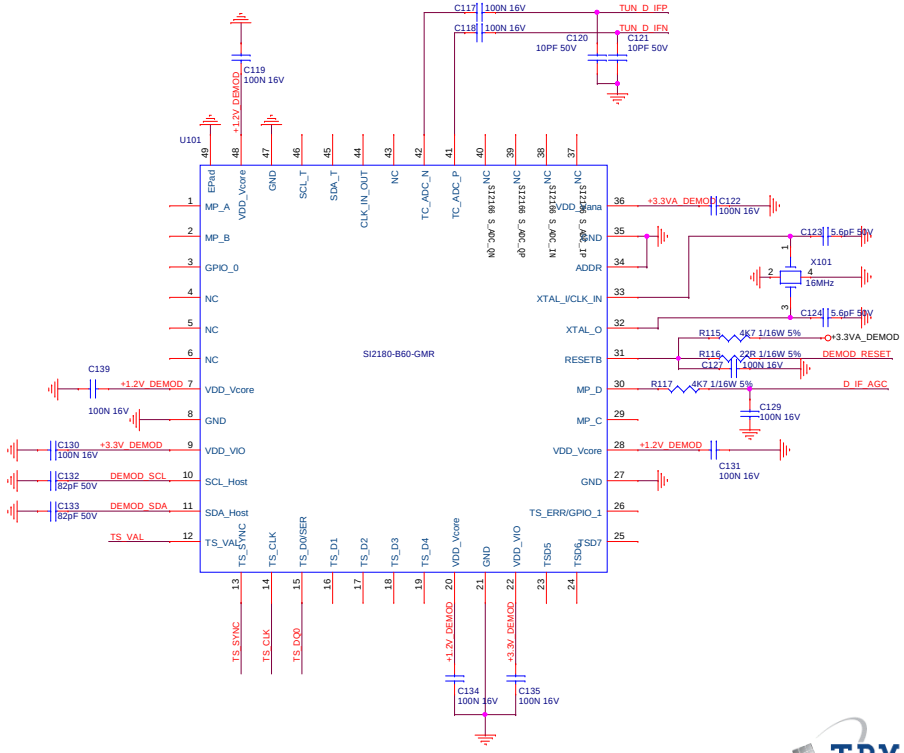


## DEMOD POWER

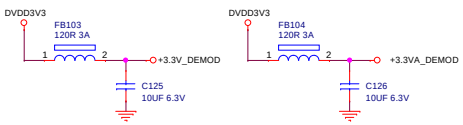


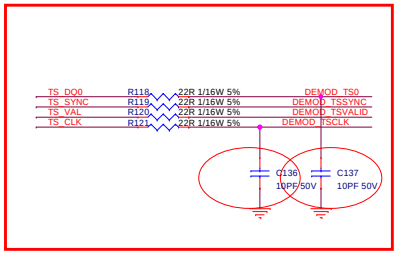


| Model | Demod | Tuner |
|---|---|---|
| LATAM | ISDB SI2180-B60<br>356G0575048615 | ST53WS-13-E<br>394GNPALALL47L |
| AP | T2 Si2168<br>356G0575048610 | TDSY-H480F<br>394GNPALALL48G |

| | | | | | |
|---|---|---|---|---|---|
| TPV (Top Victory Electronics Co., Ltd.) | | OEM MODEL | 2K17 PHP | Size | Custom |
| 線路圖編號 | 715G8251-M0A-B00-0040 | TPV MODEL | <Doc> | Rev | A |
| Key Component | 13_DEMOD/TUNER | PCB NAME | | 備註 | <備註> |
| Date | Tuesday, November 15, 2016 | Sheet | 13 of 15 | | |

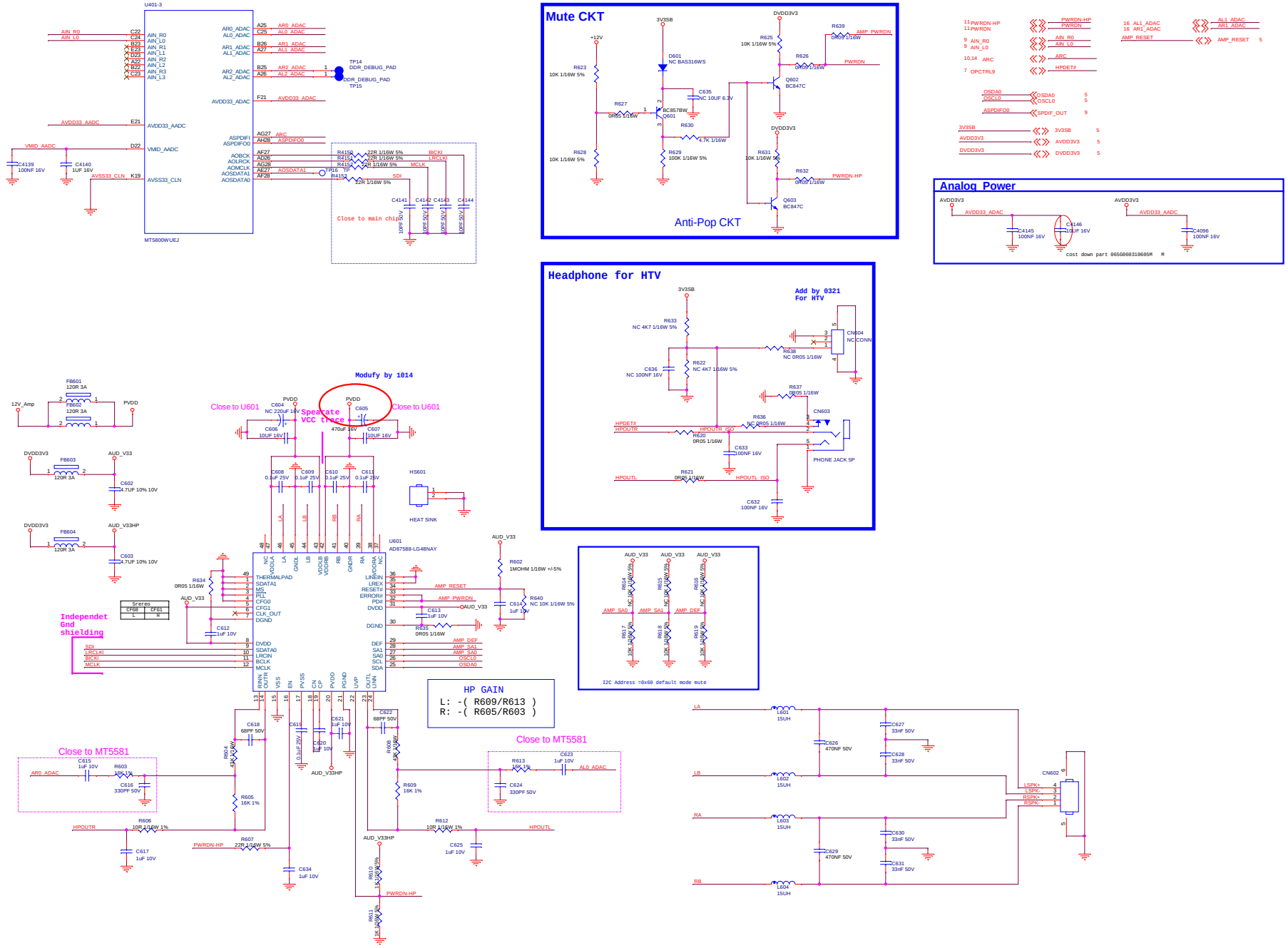


| | | | | | |
|---|---|---|---|---|---|
| T P V ( Top Victory Electronics Co., Ltd. ) | | OEM MODEL | 2K17 PHP | Size | Custom |
| 線路圖編號 | 715G8251-M0A-800-0040 | TPV MODEL | <Doc> | Rev | A |
| Key Component | 14_AMP | PCB NAME | | 備註 | <備註> |
| Date | Tuesday, November 15, 2016 | Sheet | 14 of 15 | | |

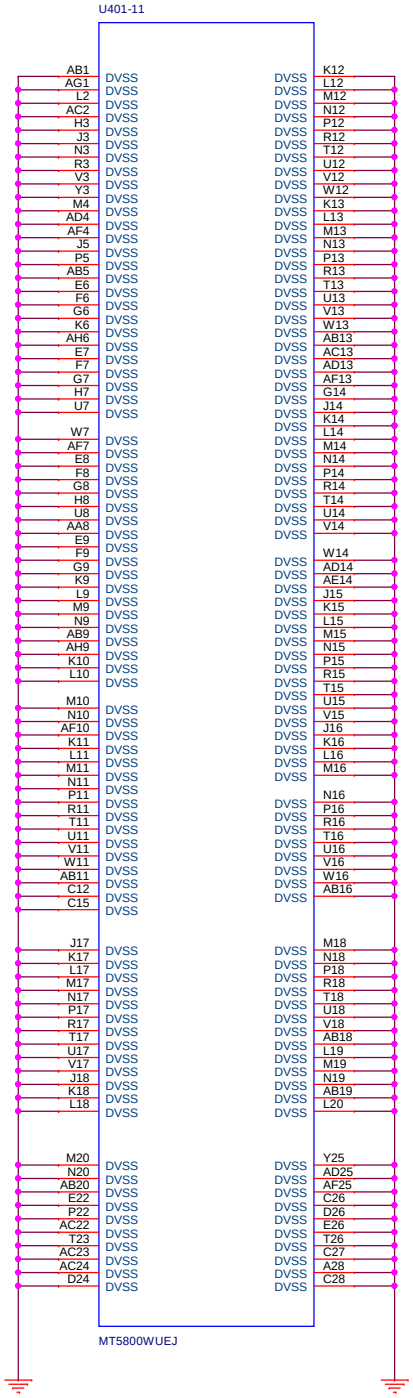


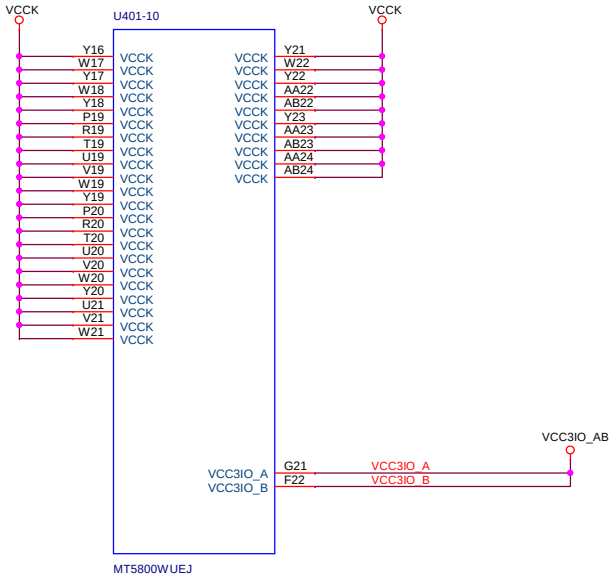


VCCK — VCCK 5

AVDD3V3 — AVDD3V3 5

## VCCK POWER

### Bottom Side Capacitors

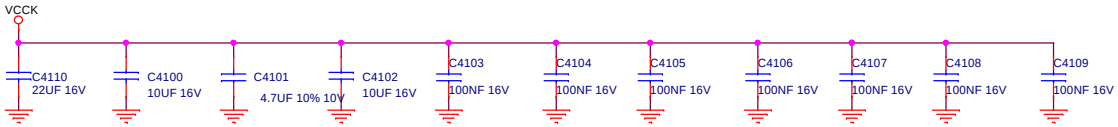


## 3V3 IO Power

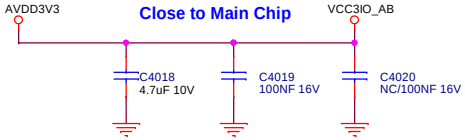


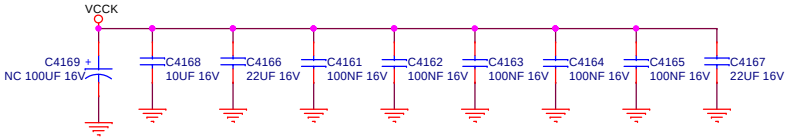


| | | | | | |
|---|---|---|---|---|---|
| T P V (Top Victory Electronics Co., Ltd.) | | OEM MODEL | 2K17 PHP | Size | Custom |
| 線路圖編號 | 715G8251-M0A-B00-0040 | TPV MODEL | <Doc> | Rev | A |
| Key Component | 15_VCCK/DVSS | PCB NAME | | 備註 | <備註> |
| Date | Tuesday, November 15, 2016 | Sheet | 15 of 15 | | |