SONY®

Line Shot Printer

LPR-1000MD

SERVICE MANUAL
Volume 1 1st Edition

⚠警告

このマニュアルは，サービス専用です。
お客様が，このマニュアルに記載された設置や保守，点検，修理などを行うと感電や火災，人身事故につながることがあります。
危険をさけるため，サービストレーニングを受けた技術者のみご使用ください。

⚠WARNING

This manual is intended for qualified service personnel only.
To reduce the risk of electric shock, fire or injury, do not perform any servicing other than that contained in the operating instructions unless you are qualified to do so. Refer all servicing to qualified service personnel.

⚠WARNUNG

Die Anleitung ist nur für qualifiziertes Fachpersonal bestimmt.
Alle Wartungsarbeiten dürfen nur von qualifiziertem Fachpersonal ausgeführt werden. Um die Gefahr eines elektrischen Schlages, Feuergefahr und Verletzungen zu vermeiden, sind bei Wartungsarbeiten strikt die Angaben in der Anleitung zu befolgen. Andere als die angegeben Wartungsarbeiten dürfen nur von Personen ausgeführt werden, die eine spezielle Befähigung dazu besitzen.

⚠AVERTISSEMENT

Ce manual est destiné uniquement aux personnes compétentes en charge de l’entretien. Afin de réduire les risques de décharge électrique, d’incendie ou de blessure n’effectuer que les réparations indiquées dans le mode d’emploi à moins d’être qualifié pour en effectuer d’autres. Pour toute réparation faire appel à une personne compétente uniquement.

注意

指定以外の電池に交換すると，破裂する危険があります。
使用済の電池は，説明書に従って処理してください。

CAUTION

Danger of explosion if battery is incorrectly replaced.

Replace only with the same or equivalent type recommended by the manufacturer.
Dispose of used batteries according to the manufacturer's instructions.

Vorsicht!

Explosionsgefahr bei unsachgemäßem Austausch der Batterie.

Ersatz nur durch denselben oder einen vom Hersteller empfohlenen ähnlichen Typ. Entsorgung gebrauchter Batterien nach Angaben des Herstellers.

ATTENTION

Il y a danger d'explosion s'il y a remplacement incorrect de la batterie.

Remplacer uniquement avec une batterie du même type ou d'un type équivalent recommandé par le constructeur.
Mettre au rebut les batteries usagées conformément aux instructions du fabricant.

ADVARSEL!

Lithiumbatteri-Eksplosionsfare ved fejlagtig håndtering.
Udskiftning må kun ske med batteri af samme fabrikat og type.
Levér det brugte batteri tilbage til leverandøren.

ADVARSEL

Lithiumbatteri - Eksplosjonsfare.
Ved utskifting benyttes kun batteri som anbefalt av apparatfabrikanten.
Brukt batteri returneres apparatleverandøren.

VARNING

Explosionsfara vid felaktigt batteribyte.
Använd samma batterityp eller en likvärdig typ som rekommenderas av apparattillverkaren.
Kassera använt batteri enligt gällande föreskrifter.

VAROITUS

Paristo voi räjähtää jos se on virheellisesti asennettu.
Vaihda paristo ainoastaan laitevalmistajan suosittelemaan tyyppiin.
Hävitä käytetty paristo valmistajan ohjeiden mukaisesti.

For the customers in the Netherlands
Voor de klanten in Nederland

Hoe u de batterijen moet verwijderen, leest u in de tekst van deze handleiding.

Gooi de batterij niet weg maar lever deze in als klein chemisch afval (KCA).

Für Kunden in Deutschland

Entsorgungshinweis: Bitte werfen Sie nur entladene Batterien in die Sammelboxen beim Handel oder den Kommunen. Entladen sind Batterien in der Regel dann, wenn das Gerät abschaltet und signalisiert "Batterie leer" oder nach längerer Gebrauchsdauer der Batterien "nicht mehr einwandfrei funktioniert". Um sicherzugehen, kleben Sie die Batteriepole z.B. mit einem Klebestreifen ab oder geben Sie die Batterien einzeln in einen Plastikbeutel.

Table of Contents

Manual Structure

Purpose of this manual 3
Related manuals 3

1. Service Overview

1-1. Items to be Performed after Repair/before Return 1-1
1-1-1. Required Parts List 1-1
1-1-2. Head Unit Assembly 1-1
1-1-3. Main Unit (LPR-1000MD) 1-1
1-1-4. Others 1-1
1-2. Unleaded Solder 1-1
1-3. Main Parts Location 1-2
1-3-1. Main Block Location 1-2
1-3-2. Board Location 1-2
1-3-3. Sensor/Actuator Location and Function 1-3
1-4. Removing/Installing the Cabinet 1-4
1-4-1. Top Cover Sub-assembly 1-4
1-4-2. Rear Cover Assembly 1-5
1-4-3. Front Panel (Lower) Assembly 1-6
1-4-4. Side Cover (L) Assembly 1-6
1-4-5. Side Cover (R) Assembly 1-7

2. Replacement of Main Parts

2-1. Replacing the Board 2-1
2-1-1. CN-2393 Board 2-1
2-1-2. Main Board Assembly (CPU-347 Board/CPU-357 Board) 2-1
2-1-3. Replacing the FP-138 Board, MEC-21 Board and Lithium Battery 2-2
2-2. Switching Regulator 2-4
2-3. Cam Motor Sub-assembly 2-4
2-4. Feed Table Assembly 2-5
2-5. Cap Motor Assembly 2-7
2-6. Motor Holder Assembly 2-8
2-7. Back Frame Assembly 2-9
2-8. Separation Roller Assembly 2-11
2-9. Transport Motor Assembly 2-13

3. Service Mode

3-1. Service Mode 3-2
3-1-1. Description of Buttons 3-2
3-1-2. Starting the Service Mode 3-2
3-1-3. Confirming the Sensor 3-2
3-1-4. Confirmation of Motor Operation 3-4
3-1-5. Confirmation of Paper Feed Operation (A print is not done in this case.) 3-4
3-1-6. Mechanical Reset (Restart) 3-4
3-2. Upgrading 3-5
3-2-1. Confirmation of Version 3-5
3-2-2. Upgrading 3-5

4. Troubleshooting

4-1. Error Code 4-1
4-2. Electrical Troubleshooting 4-2
4-2-1. Power cannot be turned on 4-2
4-2-2. Nothing appears on the LCD display panel even if the power state is changed from OFF to ON 4-3
4-2-3. The power output is turned off during start of initial operation or during initial operation when the power state is changed from OFF to ON 4-5
4-2-4. An error or comment is displayed during initial operation after the power state is changed from OFF to ON 4-5
4-2-5. The initial operation after the power state is changed from OFF to ON is normally terminated, but a printer cannot be accessed from PC 4-7
4-2-6. The state of this unit is not normally shifted even if you press each button on the front panel of this unit after the initial operation is normally terminated and after “READY” is displayed. 4-8
4-2-7. A test print or a print from PC is not normally done after the initial operation is normally terminated and after “READY” is displayed 4-8
4-2-8. A test print or a print from PC was normally done after the initial operation is normally terminated and “READY” is displayed, but a problem occurs in the print image quality. 4-10
4-3. Mechanical Troubleshooting 4-12
4-3-1. Troubles Displayed on LCD 4-12
4-3-2. Trouble during Print 4-13
4-3-3. Trouble during Paper Feed (Carrier System) 4-16
4-3-4. Trouble during Paper Eject (Carrier System) 4-17
4-3-5. Trouble during Operation (Head Unit) 4-17
4-3-6. Other Troubles 4-17

Manual Structure

Purpose of this manual

This manual is the service manual Vol. 1 of LINE Shot Printer LPR-1000MD.
This manual describes the information on maintenance and the service information such as service information, parts replacement, service mode and troubleshooting.

Related manuals

In addition to this “Service Manual Vol. 1”, this unit is provided with the manual below.

- **Service Manual Vol. 2 (Not supplied for products.)**
  Part No.: 9-877-807-11
  This manual describes the semiconductors, spare parts, block diagrams, schematic diagrams, and board layouts of this unit.

- **Operating Instruction (Supplied for products.)**
  Part No.: 3-207-760-11
  These manuals describes the information required for the actual management and operation of this unit.

- **“Semiconductor Pin Assignments” CD-ROM (Available on request)**
  This “Semiconductor Pin Assignments” CD-ROM allows you to search for semiconductors used in B&P Company equipment.
  Semiconductors that cannot be searched for on this CD-ROM are listed in the service manual for the corresponding unit. The service manual contains a complete list of all semiconductors and their ID Nos., and thus should be used together with the CD-ROM.
  Part number: 9-968-546-XX

Section 1
Service Overview

1-1. Items to be Performed after Repair/ before Return

1-1-1. Required Parts List

The following parts are used in “1-1. Items to be Performed after Repair/before Return”.

Part Name	Sony Part Number
Cap bottom assembly	A-8279-906-A
Cushion (A) × 2	3-806-622-01
Roller ejector	3-838-828-02
Cap ejector	3-809-947-02
Dummy pack	X-3608-812-1
Stopper (T-CAP)	3-808-883-01
Transport pack	3-806-893-01
Transport cap assembly	A-8279-905-E
I bulb cap	3-806-892-02

1-1-2. Head Unit Assembly

1. Attach the dummy pack and perform the pump circulation by using the service software.
2. Attach the transport cap assembly and I bulb cap. Put the unit in the transport pack and seal it.
   Secure the transport cap assembly with the stopper (T-CAP).

1-1-3. Main Unit (LPR-1000MD)

1. Perform the initial setting using the service software.
2. Attach the cap bottom assembly.
3. Attach the cushion (A) × 2.
4. Pack the unit in the LPR-1000MD carton or in the transport carton (Pasocompo of Nippon Express)

1-1-4. Others

1. Put the ink cartridge and cleaning unit used by user in the plastic bag and return it to the user.

1-2. Unleaded Solder

Boards requiring use of unleaded solder are printed with a lead free mark (LF) indicating the solder contains no lead. (Caution: Some printed circuit boards may not come printed with the lead free mark due to their particular size.)

: LEAD FREE MARK

Notes

- Be sure to use the unleaded solder for the printed circuit board printed with the lead free mark.
- The unleaded solder melts at a temperature about 40 °C higher than the ordinary solder, therefore, it is recommended to use the soldering iron having a temperature regulator.
- The ordinary soldering iron can be used but the iron tip has to be applied to the solder joint for a slightly longer time. The printed pattern (copper foil) may peel away if the heated tip is applied for too long, so be careful.

The boards that are applicable to the lead free solder in this unit are as follows.

Board name	Applicable to lead free or not
CN-2393 board	×
CPU-347 board	×
CPU-357 board	×
MEC-21 board	×
FP-138 board	×
SE-643 board	○
SE-644 board	○
SE-645 board	○
SE-646 board	○
SE-673 board	○
SE-674 board	○
SE-736 board	○
SE-737 board	○
SU-69 board	○
SU-74 board	○
SU-75 board	○
SW-1105 board	○

○: Applicable to lead free solder
×: Not applicable to lead free solder

1-3. Main Parts Location

1-3-1. Main Block Location

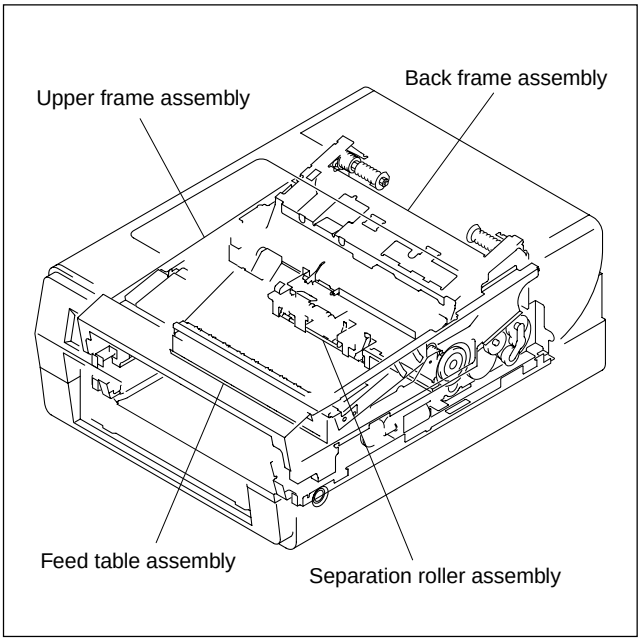

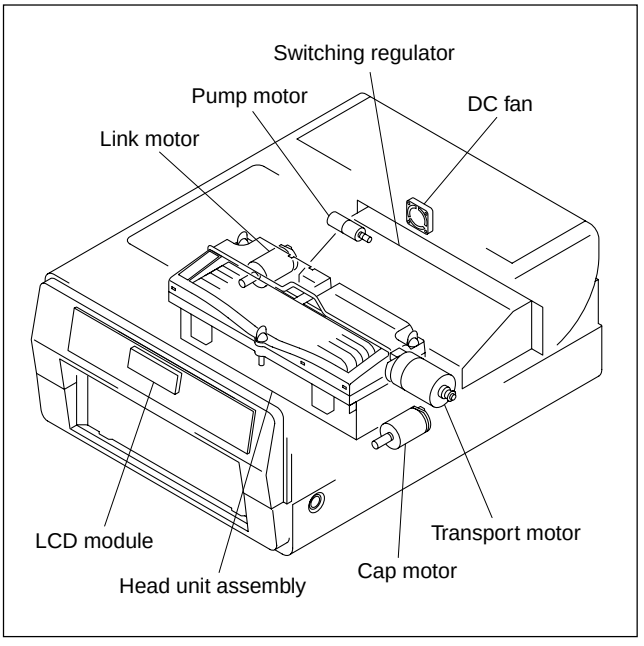

1-3-2. Board Location

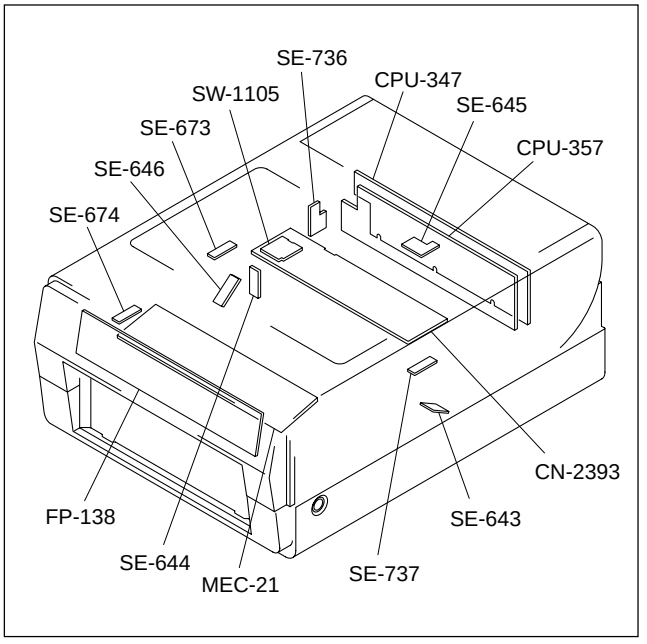

1-3-3. Sensor/Actuator Location and Function

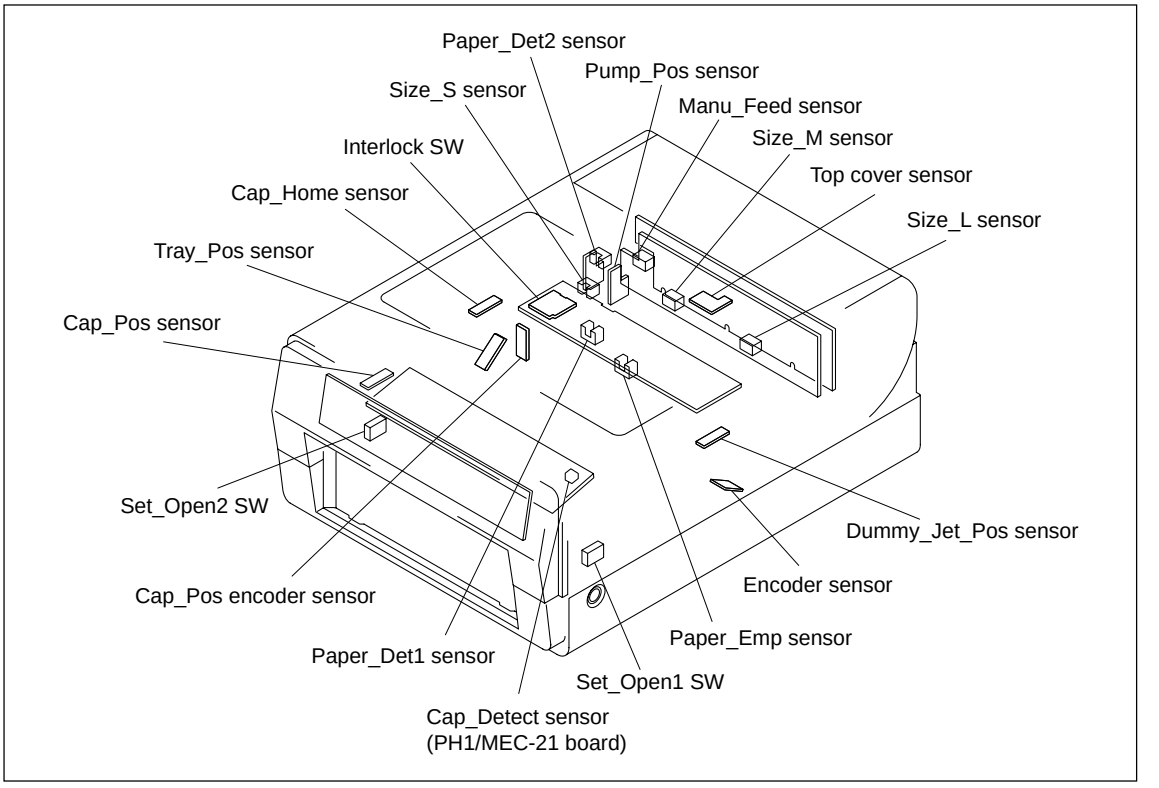

Name	Function
Paper_Emp sensor (Paper sensor)	Detects the presence or absence of paper in the tray.
Paper_Det2 sensor (Transport sensor2)	Detects the paper feed status and timing in auto paper feeding.
Manu_Feed sensor (Manual paper feed sensor)	Detects the presence or absence of the paper for manual feeding. (This function is not used.)
Size_S sensor (Size sensor 1)	Paper size (small) sensor (Detects postcard size.)
Size_M sensor (Size sensor 2)	Paper size (medium) sensor (Detects B5 size.)
Size_L sensor (Size sensor 3)	Paper size (large) sensor (Detects A4 size.)
Paper_Det1 sensor (Transport sensor 1)	Detects the paper feed status and timing to control the lifter.
Encoder sensor (Paper transport sensor)	Detects the rotational speed 1 (paper transport speed) of paper transport encoder.
Tray_Pos sensor (tray sensor)	Detects the switching of the paper feed mode (Detects paper feed state/No paper feed state)
Cap_Detect sensor	–
Cap_Home sensor (Cap close sensor)	Detects the home position of the head cap. (Cap close state)
Cap_Pos encoder sensor (Cap position sensor)	Detects the head cap position and moving speed.
Cap_Pos sensor (Cap open sensor)	Detects the head cap printable position. (Cap open state)
Top cover sensor (Cover open/close sensor)	Detects the top cover close state. (During head/ink cartridge replacement)
Set_Open 1/2 SW (Set open/close detection switch)	Detects the main unit cover close state.
Dummy_Jet_Pos sensor (Yellow Ink Dummy Jet starting position sensor)	Detects the Yellow Ink Dummy Jet starting position.
Pump_Pos sensor (Pump position sensor)	Detects the pump motor home position.
Interlock SW (Interlock switch)	Interrupt the motor power forcefully when the main unit cover is in the open state.

1-4. Removing/Installing the Cabinet

1-4-1. Top Cover Sub-assembly

Note

Be sure that the nozzle surface of the removed head unit assembly is not in contact with any surface. Otherwise, it may cause the damage to the nozzle surface. Place the removed head unit assembly as shown in the illustration below.

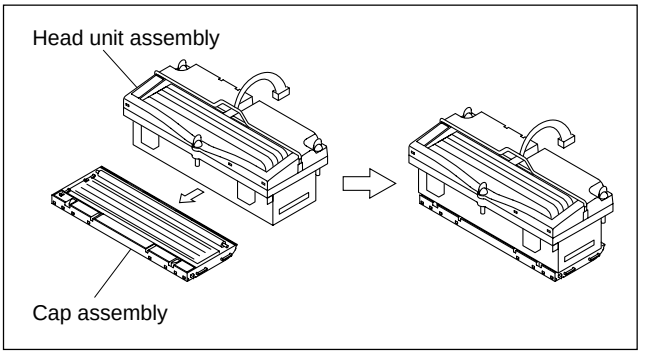

1. Open the head cover.
2. Disconnect the harness from the connector, then rotate the three fasteners in the direction shown by the arrow and remove the head unit assembly.

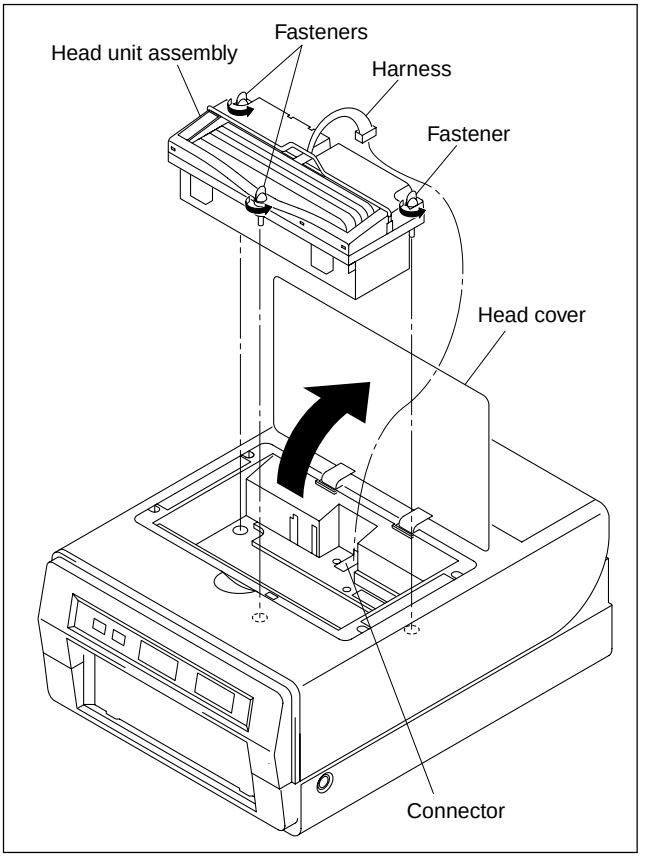

3. Remove the four screws, then remove the inner cover assembly.

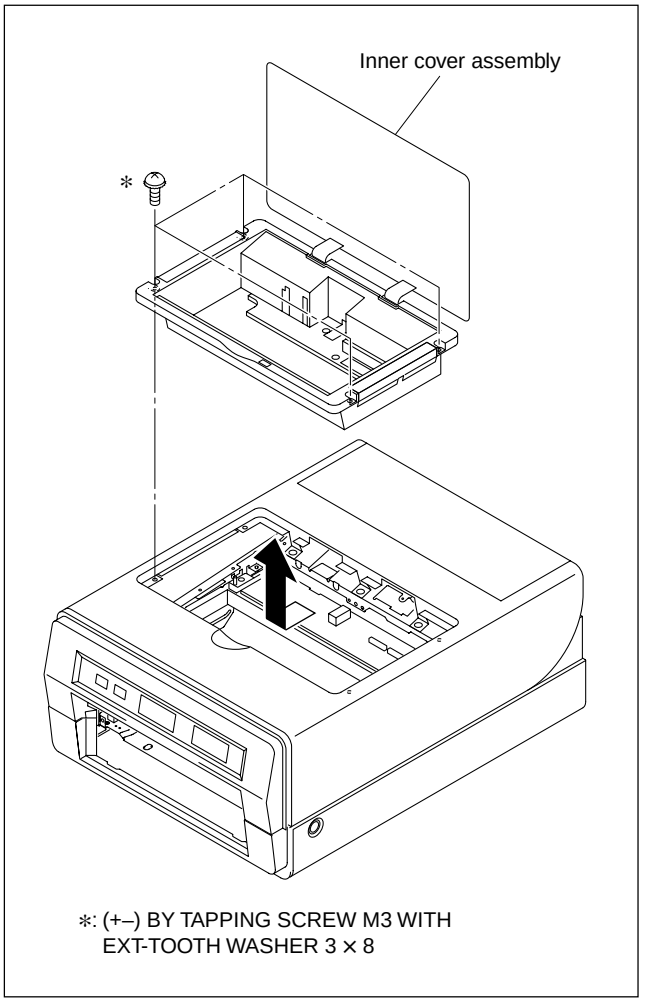

4. Remove the four screws, then remove the two harnesses for earth and top cover sub-assembly.

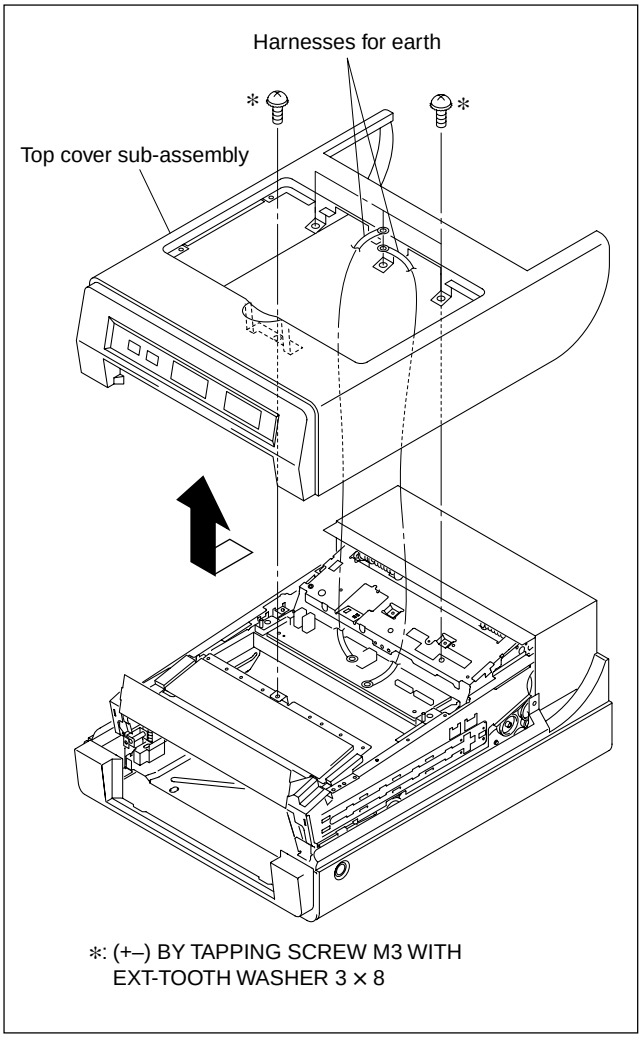

5. Attach the top cover sub-assembly in the reverse order of steps 1 to 4.

1-4-2. Rear Cover Assembly

1. Remove the top cover sub-assembly. (Refer to Section 1-4-1.)
2. Remove the six screws, then remove the rear cover assembly.

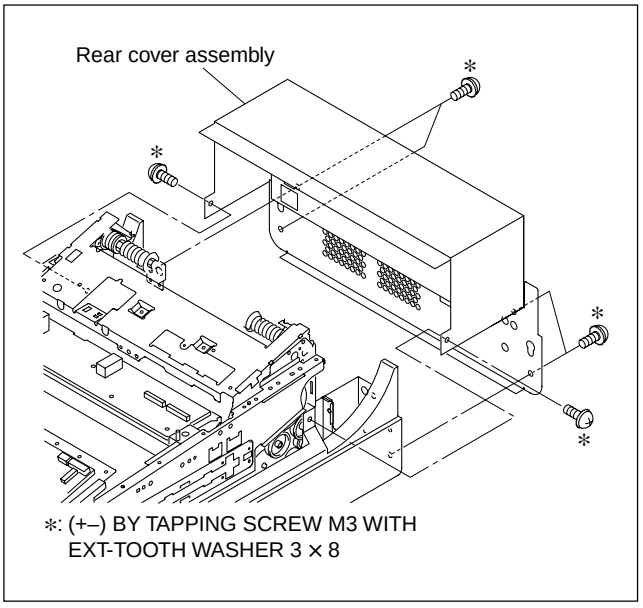

3. Attach the rear cover assembly in the reverse order of steps 1 and 2.

1-4-3. Front Panel (Lower) Assembly

1. Press the eject button, then open the top cover sub-assembly.
2. Remove the two screws, then remove the front panel (lower) assembly.

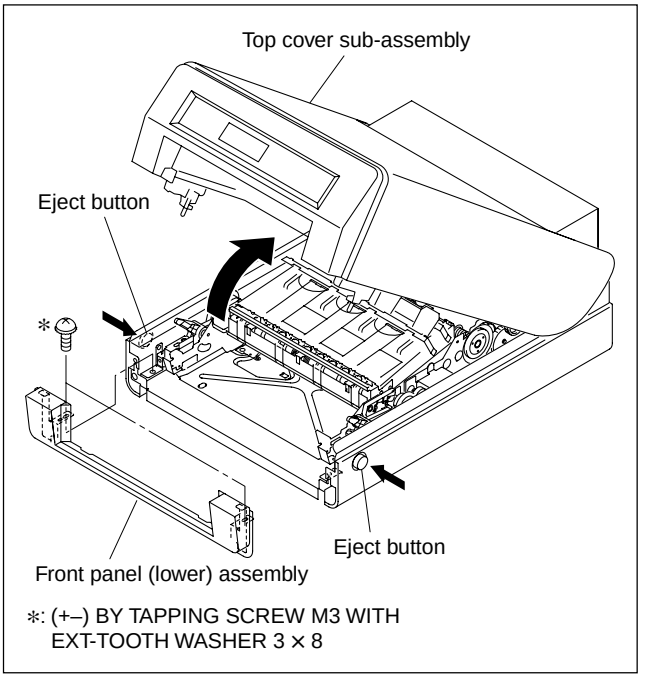

3. Attach the front panel (lower) assembly in the reverse order of steps 1 and 2.

1-4-4. Side Cover (L) Assembly

1. Remove the top cover sub-assembly. (Refer to Section 1-4-1.)
2. Remove the rear cover assembly. (Refer to Section 1-4-2.)
3. Remove the front panel (lower) assembly. (Refer to Section 1-4-3.)
4. Remove the two screws.
5. Remove the rear of side cover (L) assembly from the projection of lower chassis in the direction shown by the arrow A.
6. Remove the front of side cover (L) assembly from the projection of lower chassis in the direction shown by the arrow B, then remove the side cover (L) assembly.

   Note

   Be careful that the helical compression spring does not pop out when removing the side cover (L) assembly.
7. Remove the helical compression spring, eject button and acoustic material (L) from the side cover (L).

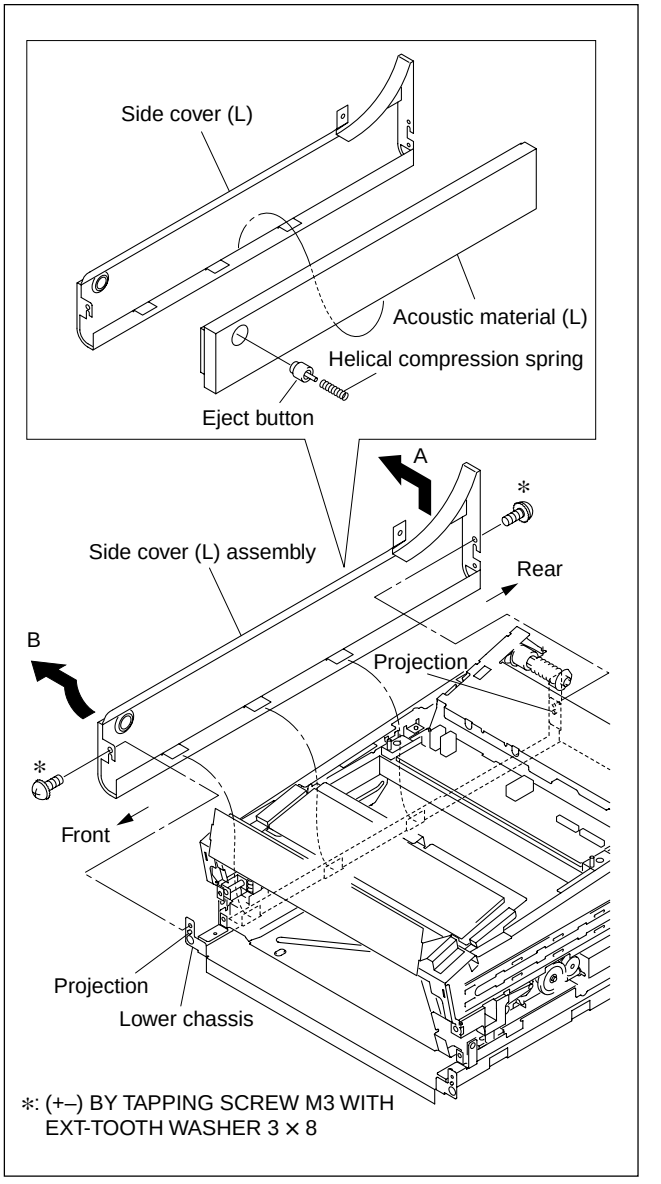

8. Attach the side cover (L) assembly in the reverse order of steps 1 to 7.

1-4-5. Side Cover (R) Assembly

1. Remove the top cover sub-assembly. (Refer to Section 1-4-1.)
2. Remove the rear cover assembly. (Refer to Section 1-4-2.)
3. Remove the front panel (lower) assembly. (Refer to Section 1-4-3.)
4. Remove the two screws.
5. Remove the rear of side cover (R) assembly from the projection of lower chassis in the direction shown by the arrow A.
6. Remove the front of side cover (R) assembly from the projection of lower chassis in the direction shown by the arrow B, then remove the side cover (R) assembly.

   Note

   Be careful that the helical compression spring does not pop out when removing the side cover (R) assembly.
7. Remove the helical compression spring, eject button and acoustic material (R) from the side cover (R).

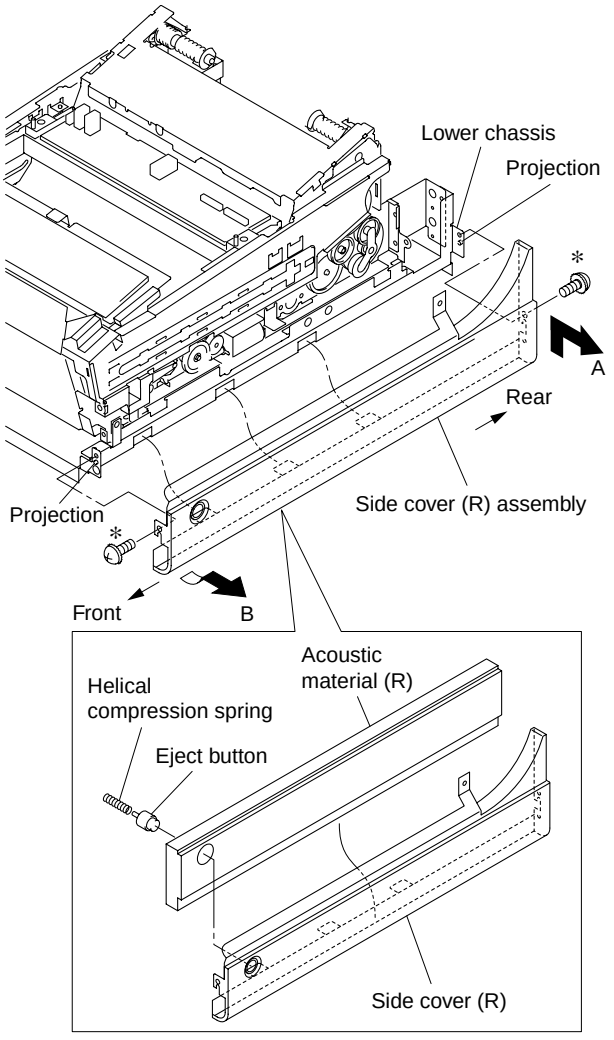

*: (+–) BY TAPPING SCREW M3 WITH EXT-TOOTH WASHER 3 × 8

8. Attach the side cover (R) assembly in the reverse order of steps 1 to 7.

Section 2
Replacement of Main Parts

2-1. Replacing the Board

2-1-1. CN-2393 Board

1. Remove the top cover sub-assembly. (Refer to Section 1-4-1.)
2. Remove the two flexible wiring boards from the connectors (CN2 and CN3) and disconnect the three harnesses from the connectors (CN5, CN6 and CN7) on the CN-2393 board.
3. Remove the four screws, then remove the two CN-PWB earth plates, two harnesses for earth and CN-2393 board.

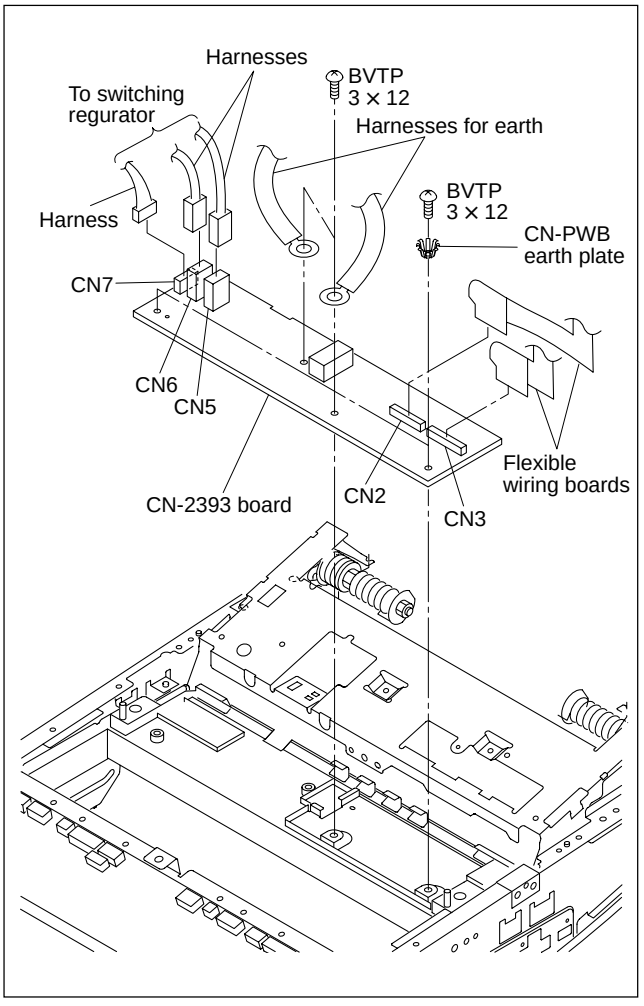

4. Install the CN-2393 board in the reverse order of steps 1 to 3.

2-1-2. Main Board Assembly (CPU-347 Board/CPU-357 Board)

Note

When installing the CPU-347 board, be sure to securely insert the connector (CN101) on the CPU-347 board into the connector (CN101) on the CPU-357 board.

1. Remove the top cover sub-assembly. (Refer to Section 1-4-1.)
2. Remove the rear cover assembly. (Refer to Section 1-4-2.)
3. Remove the seven screws, then remove the rear shield (B).
4. Remove the three flexible wiring boards from the connectors (CN801 and CN901) on the CPU-347 board and the connector (CN1701) on the CPU-357 board.
5. Disconnect the harness from the connector (CN1001) on the CPU-347 board.

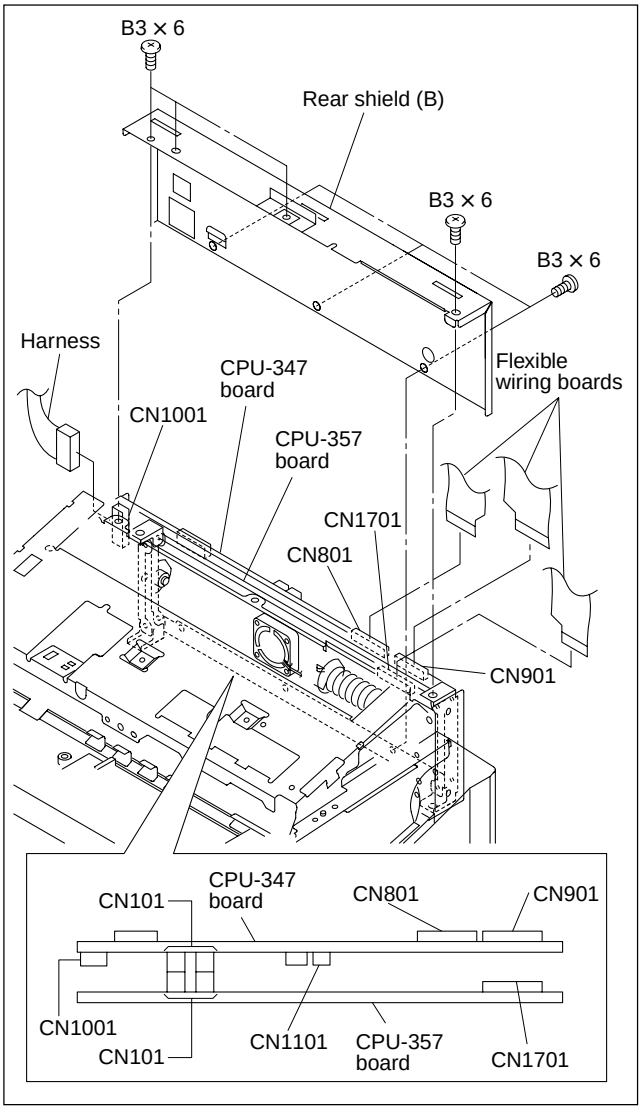

6. Remove the three screws, then remove the rear shield (A).
7. Remove the USB connector earth plate, ETHER connector cap and ETHER connector earth plate.
8. Remove the four screws (BVTT3 × 6) and disconnect the harness from the connector (CN1101) on the CPU-347 board.
9. Remove the CPU-347 board from the connector (CN101) on the CPU-357 board.
10. Remove the three screws (B3 × 6), then remove the two rear shield brackets.
11. Remove the four screws (BVTT3 × 6), then remove the CPU-357 board.

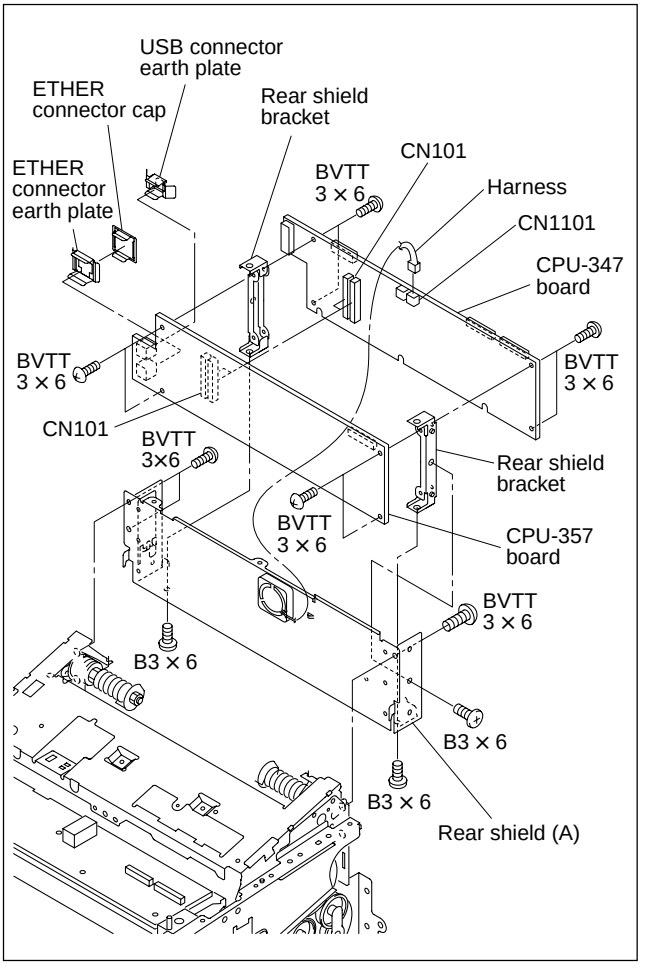

12. Install the CPU-347 board and CPU-357 board in the reverse order of steps 1 to 11.

2-1-3. Replacing the FP-138 Board, MEC-21 Board and Lithium Battery

Note

After replacing the lithium battery, it is required to set the clock again. For details, refer to “Set the printer on Web monitor (for administrator)” in the operating instructions.

Part for replacement

Part Name: Lithium battery (CR2032 type)
Part No.: 1-528-174-11
Battery spec.: Voltage: 3 V
Capacity: 220 mAH

1. Remove the top cover sub-assembly. (Refer to Section 1-4-1.)
2. Remove the two screws and disconnect the harness from the connector (CN101) on the FP-138 board, then remove the FP-138 board.
3. Remove the four hooks [A], then remove the LCD bracket.
4. Remove the two hooks [B], then remove the LCD module from the connector (CN102) on the FP-138 board.

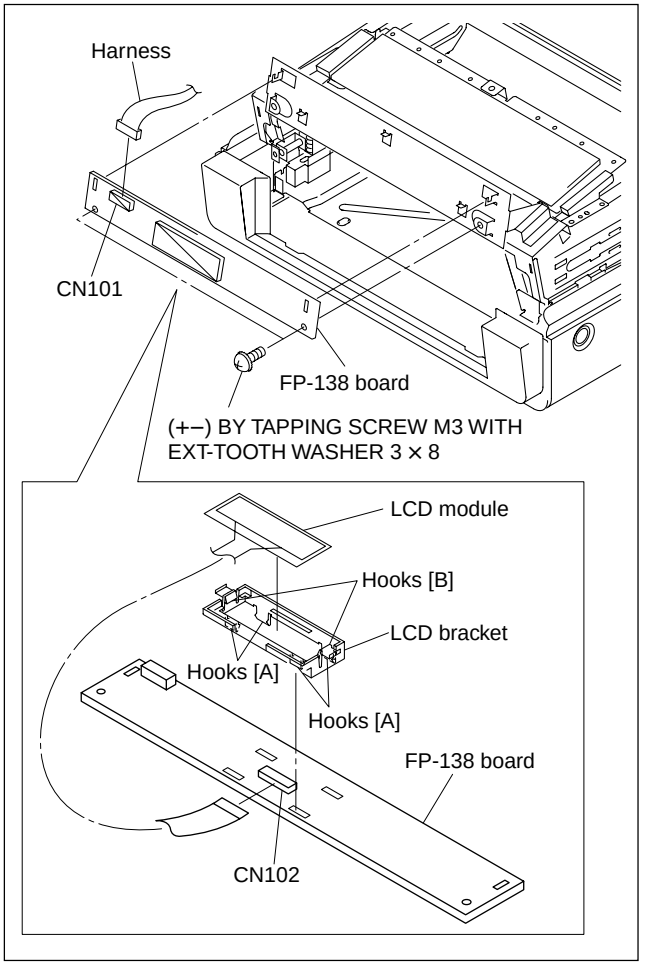

5. Remove the harness from the eight clampers.
6. Disconnect the eleven harnesses from the connectors (CN101-106, CN201, 202, 301, 401 and CN402) and remove the flexible wiring plate from the connector (CN203) on the MEC-21 board.

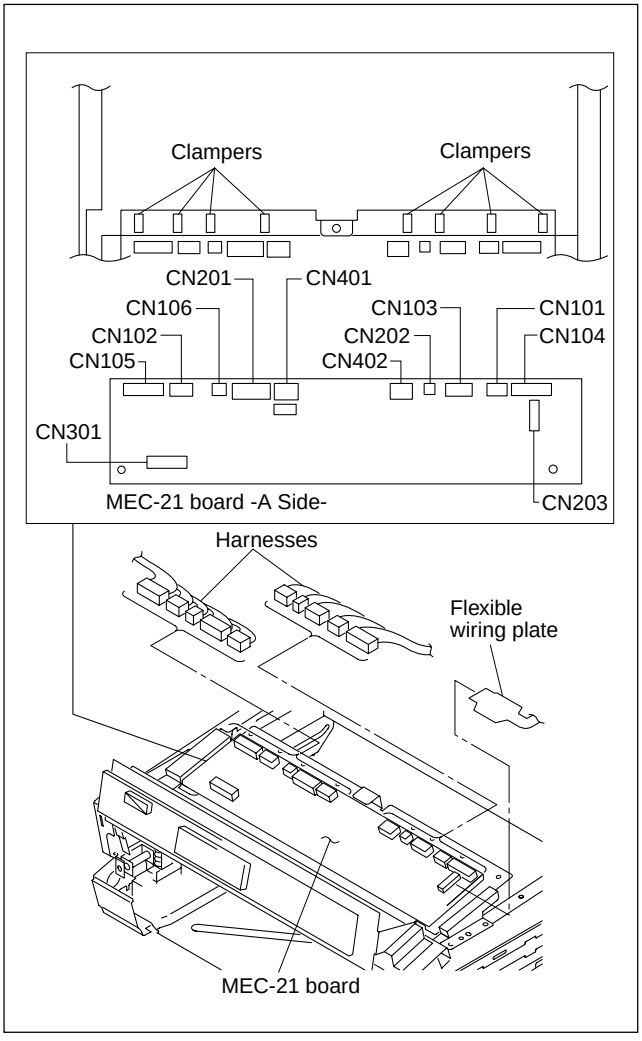

7. Remove the two screws, then remove the MEC-16 board.
8. Remove the lithium battery from the MEC-21 board in the direction shown by the arrow A, and then B.

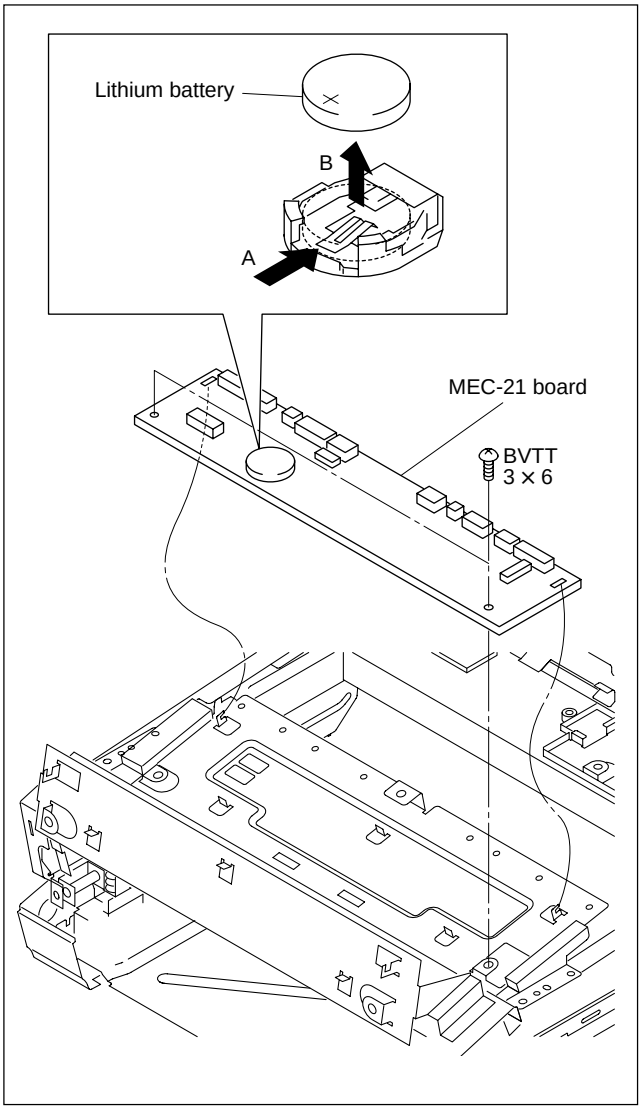

9. Install the MEC-21 board in the reverse order of steps 1 to 8.

2-2. Switching Regulator

1. Remove the top cover sub-assembly. (Refer to Section 1-4-1.)
2. Remove the rear cover assembly. (Refer to Section 1-4-2.)
3. Remove the front panel (lower) assembly. (Refer to Section 1-4-3.)
4. Remove the side cover (L) assembly. (Refer to Section 1-4-4.)
5. Disconnect the five harnesses from the connectors (CN1-5) on the switching regulator.
6. Remove the three screws, then pull out the switching regulator in the direction shown by the arrow.

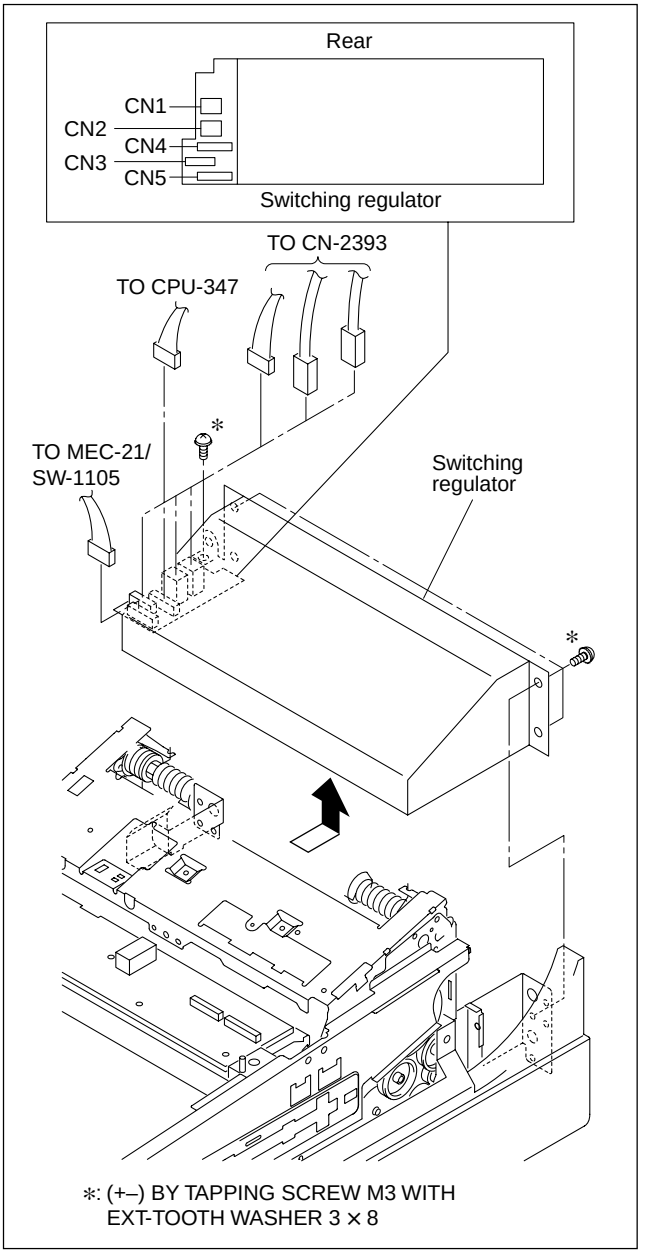

7. Attach the switching regulator in the reverse order of steps 1 to 6.

2-3. Cam Motor Sub-assembly

Required tool: Torque wrench
Sony Part Number: J-9001-010-A

1. Remove the top cover sub-assembly. (Refer to Section 1-4-1.)
2. Remove the five screws (BVTT3 × 6), then remove the upper frame stay.
3. Remove the two screws (BVTT3 × 6), then remove the cam motor sub-assembly.
4. Disconnect the three harnesses from the connectors (CN1-3) on the SE-736 board.
5. Remove the screw (B2 × 4), then remove the SE-736 board.
6. Remove the two hexagon socket head cap screws, then remove the DC gear motor.
7. Remove the flat point hexagon socket setscrew, then remove the gear B.

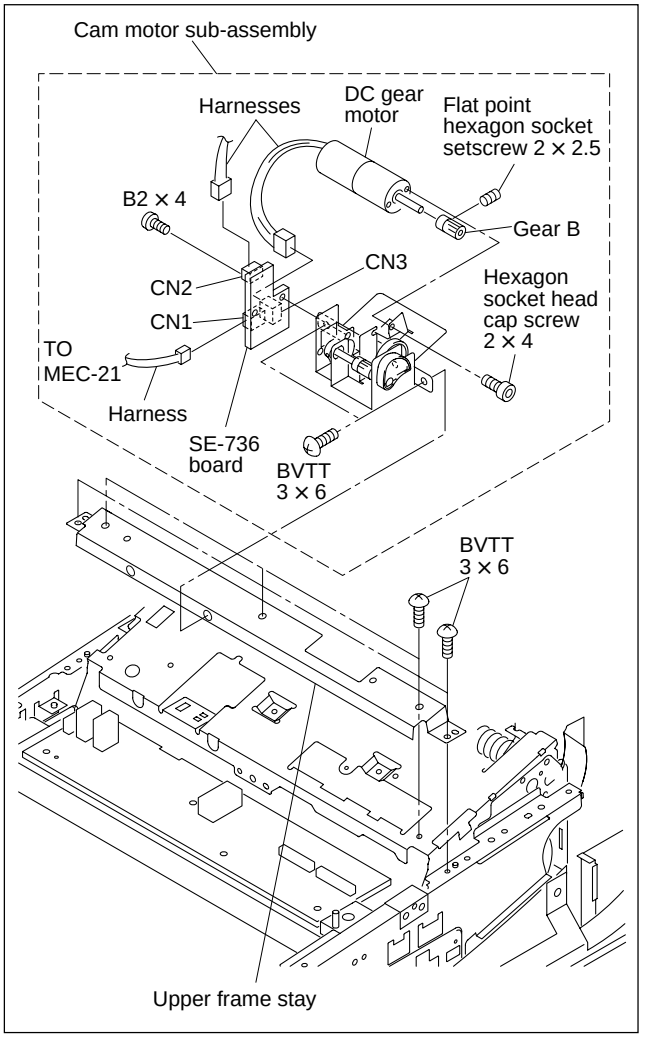

8. Attach the cam motor sub-assembly in the reverse order of steps 1 to 7.

2-4. Feed Table Assembly

Note

When attaching the feed table assembly, be sure to securely attach the sub-shaft assembly to the groove of the up-down lever (A) assembly.

1. Remove the top cover sub-assembly. (Refer to Section 1-4-1.)
2. Remove the rear cover assembly. (Refer to Section 1-4-2.)
3. Remove the front panel (lower) assembly. (Refer to Section 1-4-3.)
4. Remove the side cover (L) assembly. (Refer to Section 1-4-3.)
5. Remove the side cover (R) assembly. (Refer to Section 1-4-4.)
6. Open the upper frame assembly. (Refer to Step 1 of Section 1-4-3.)
7. Remove the screw, then remove the encoder disk cover.
8. Push the up-down lever (BL) and up-down lever (BR) in the direction shown by the arrow A, then lift the feed table assembly.
9. Remove the two bearings from the chassis in the direction shown by the arrow B, then rotate them in the direction shown by the arrow C and remove the feed table assembly.

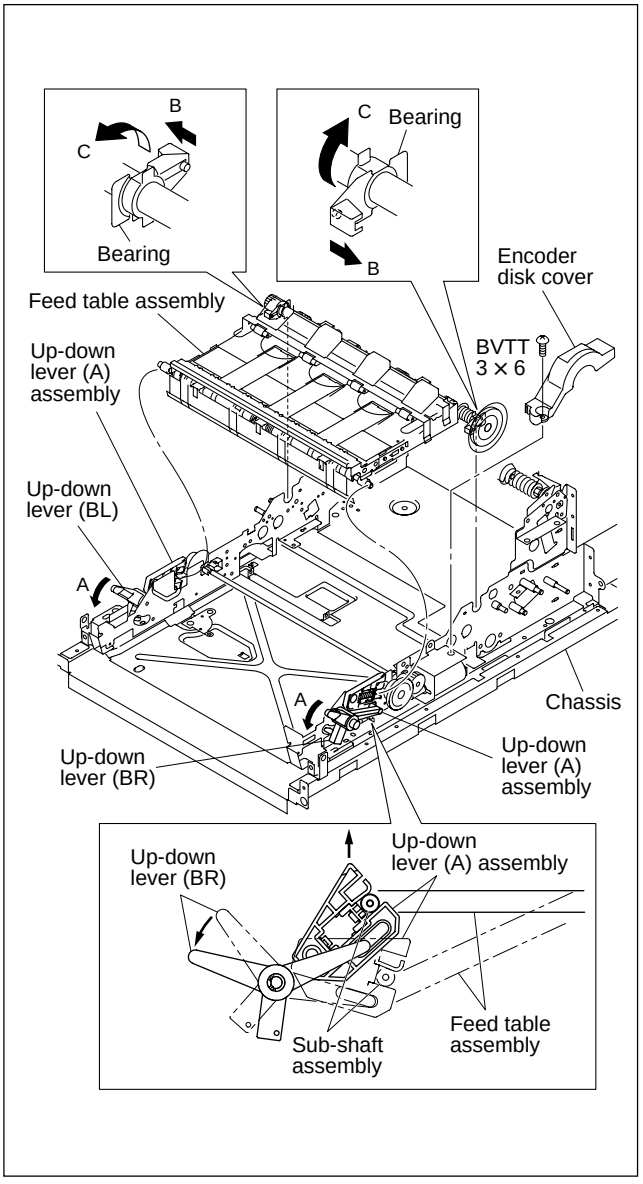

10. Expand the portion A of the pinch roller assembly, then remove the pinch roller assembly.
11. Expand the portion B of the spur assembly, then remove the spur assembly.

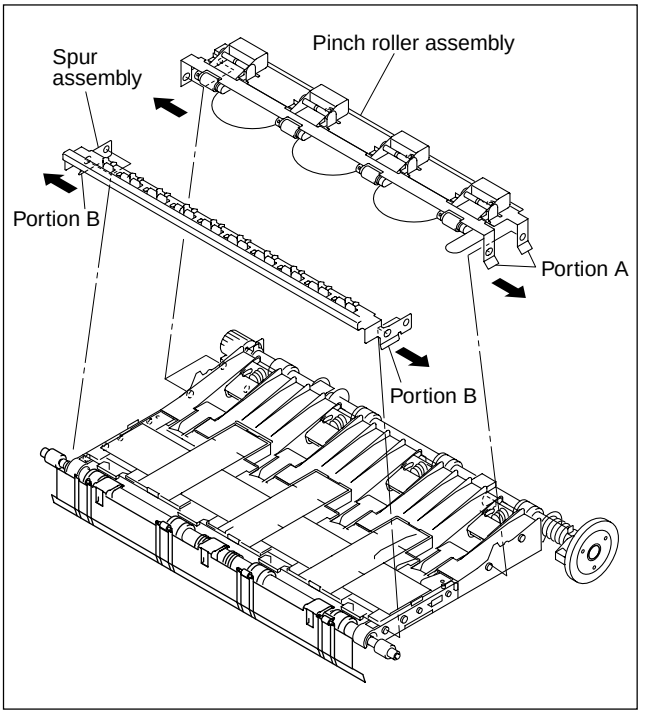

12. Remove the paper gate assembly from the ink reserver assembly and sub-shaft assembly.

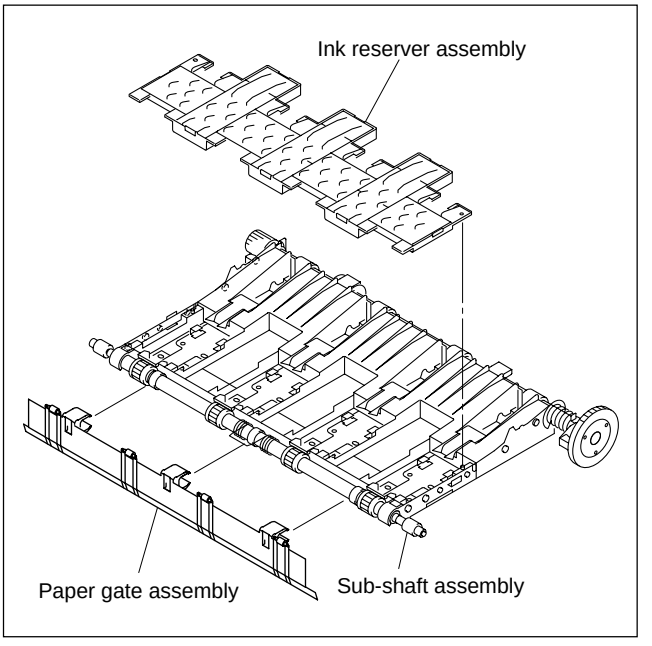

13. Raise the portion A of the idler roller assembly, then remove the eight idler roller assemblies from the feed table.
14. Remove the two bearings of the sub-shaft assembly from the feed table assembly, then remove the sub-shaft assembly in the direction shown by the arrow.

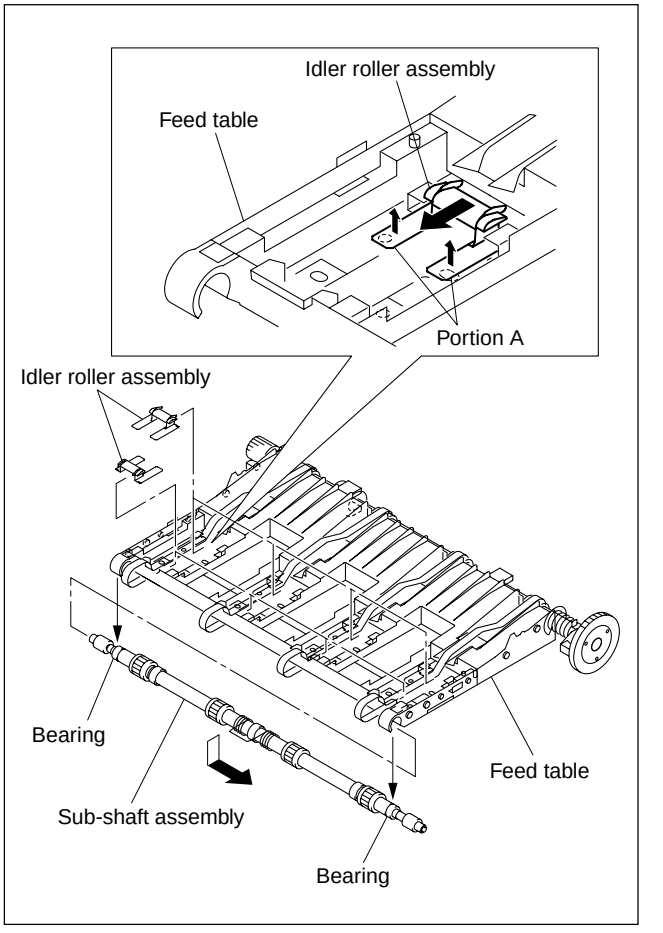

15. Pull out the shaft while pushing the portion A of the tension roller sub-assembly in the direction shown by the arrow, then remove the four shafts and four tension roller sub-assemblies.
16. Remove the four feed belts.

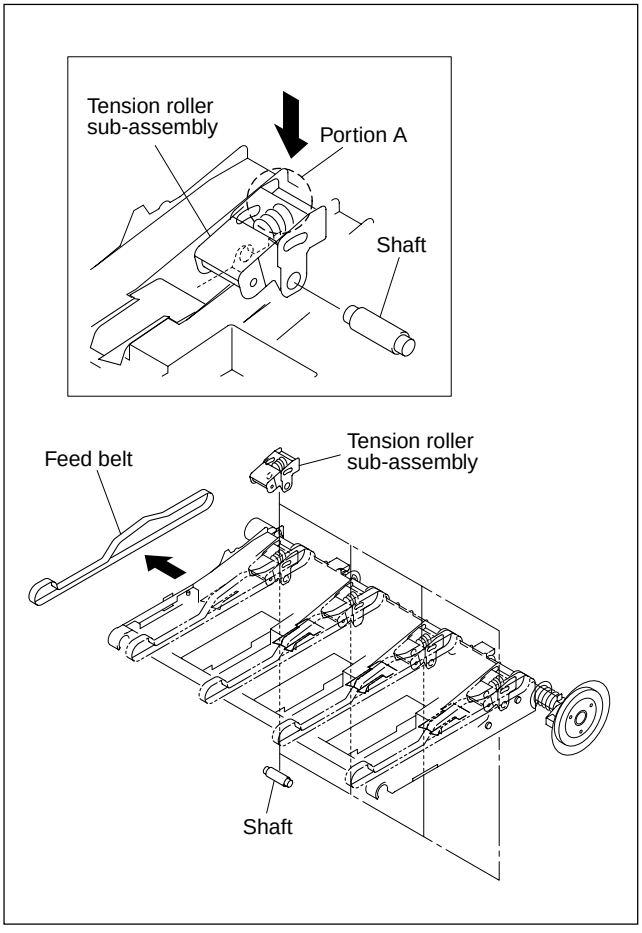

17. Attach the feed table assembly in the reverse order of steps 1 to 16.

2-5. Cap Motor Assembly

1. Remove the top cover sub-assembly. (Refer to Section 1-4-1.)
2. Remove the rear cover sub-assembly. (Refer to Section 1-4-2.)
3. Remove the front panel (lower) assembly. (Refer to Section 1-4-3.)
4. Remove the side cover (R) assembly. (Refer to Section 1-4-4.)
5. Remove the encoder disk cover. (Refer to step 6 of Section 2-4.)
6. Disconnect the harness from the connector on the SU-69 board.
7. Remove the three screws, then remove the cap motor assembly.

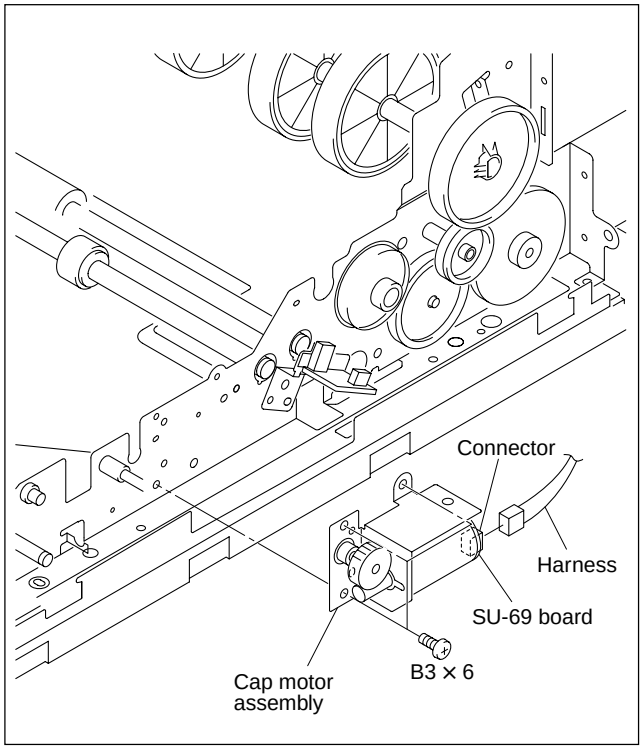

8. Attach the cap motor assembly in the reverse order of steps 1 to 7.

2-6. Motor Holder Assembly

1. Remove the top cover sub-assembly. (Refer to Section 1-4-1.)
2. Remove the rear cover assembly. (Refer to Section 1-4-2.)
3. Remove the front panel (lower) assembly. (Refer to Section 1-4-3.)
4. Remove the side cover (L) assembly. (Refer to Section 1-4-3.)
5. Remove the screw (BVTT3 × 6), then remove the interlock bracket.
6. Remove the two screws (B3 × 6), then remove the motor holder assembly.
7. Disconnect the harness from the connector on the link motor assembly.
8. Disconnect the harness from the connector on the SE-646 board.

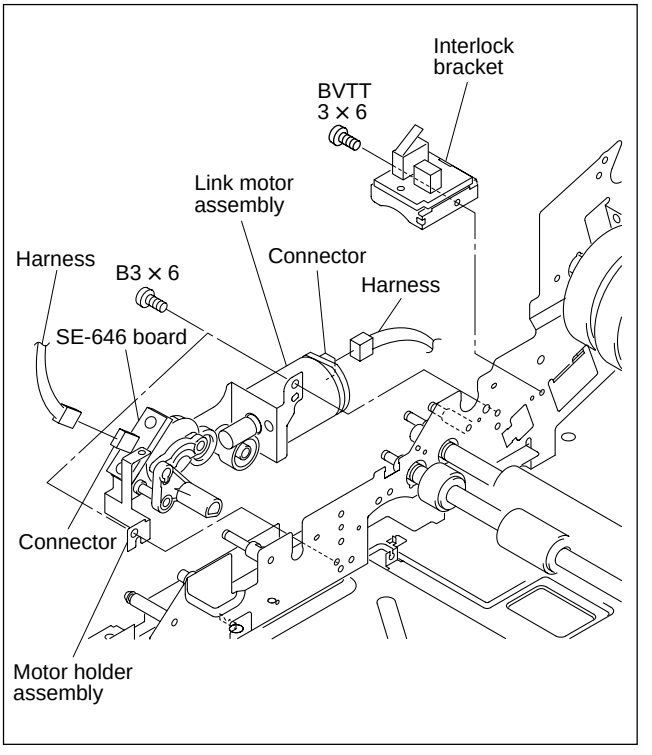

9. Remove the screw (B2.6 × 3), then remove the SE-646 board.
10. Remove the retaining ring, then remove the arm link
11. Remove the three retaining rings, then remove the link gear, worm wheel and gear 32.
12. Remove the two screws (PS2.6 × 5), then remove the link motor assembly.

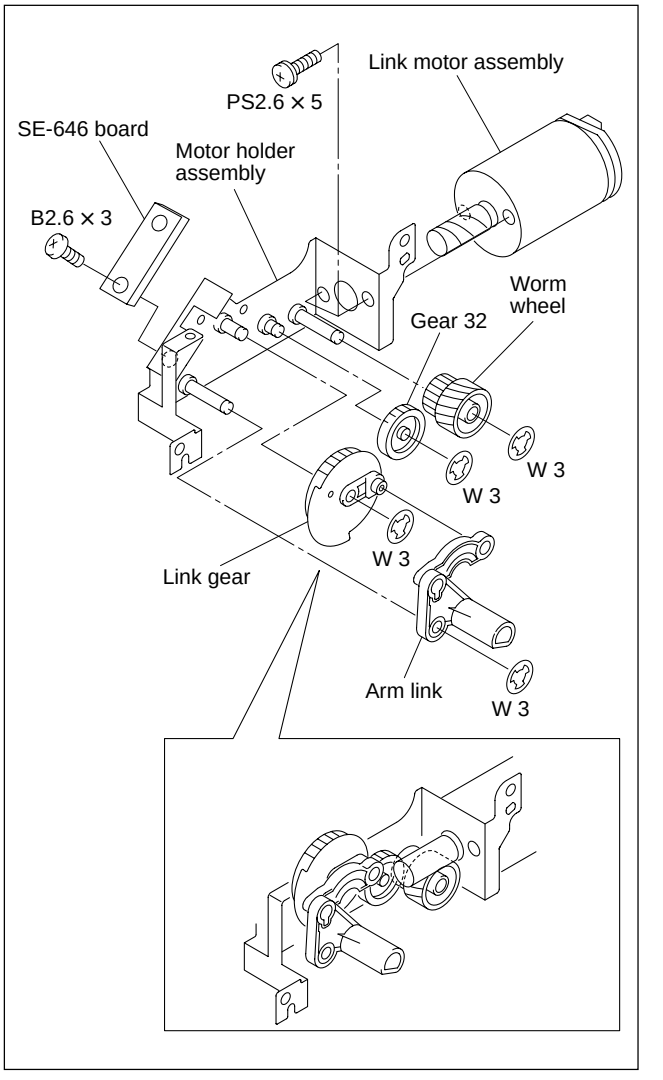

13. Attach the motor holder assembly in the reverse order of steps 1 to 12.

2-7. Back Frame Assembly

Notes

- When attaching/removing the upper frame assembly, be careful in handling the flexible wiring plate.
- When removing the harnesses from each board, it is recommended to bundle them with adhesive cellophane tape, band, etc.

1. Remove the top cover sub-assembly. (Refer to Section 1-4-1.)
2. Remove the rear cover assembly. (Refer to Section 1-4-2.)
3. Remove the front panel (lower) assembly. (Refer to Section 1-4-3.)
4. Remove the side cover (L) assembly. (Refer to Section 1-4-3.)
5. Remove the side cover (R) assembly. (Refer to Section 1-4-4.)
6. Remove the main board assembly. (Refer to Section 2-1-2.)
7. Remove the cam motor sub-assembly. (Refer to Section 2-3.)
8. Remove the feed table assembly. (Refer to Section 2-4.)
9. Disconnect the three harnesses from the connectors (CN5-7) and remove the two flexible wiring plates from the connectors (CN2 and CN3) on the CN-2393 board.
10. Remove all harnesses and flexible wiring plates from the connectors on the MEC-21 board.
11. Disconnect all harnesses from the connectors on the SE-673/674/737 boards.
12. Remove the harnesses from the nineteen clampers.
13. Remove the four screws, then remove the head earth plate (L) and head earth plate (R).

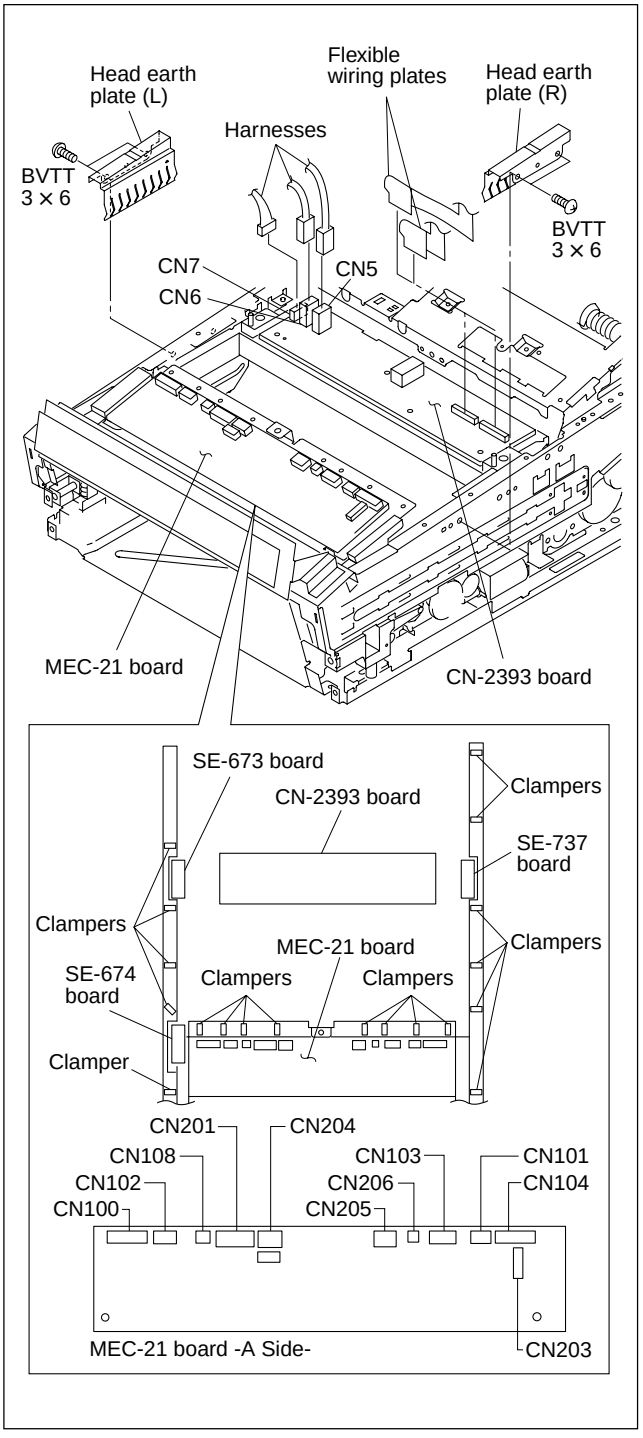

14. Disconnect the harness from the connector on the SE-645 board and remove the screw (BVTT3 × 6), then remove the SE-645 board.
15. Remove the four screws (B3 × 8), then remove the upper frame assembly.

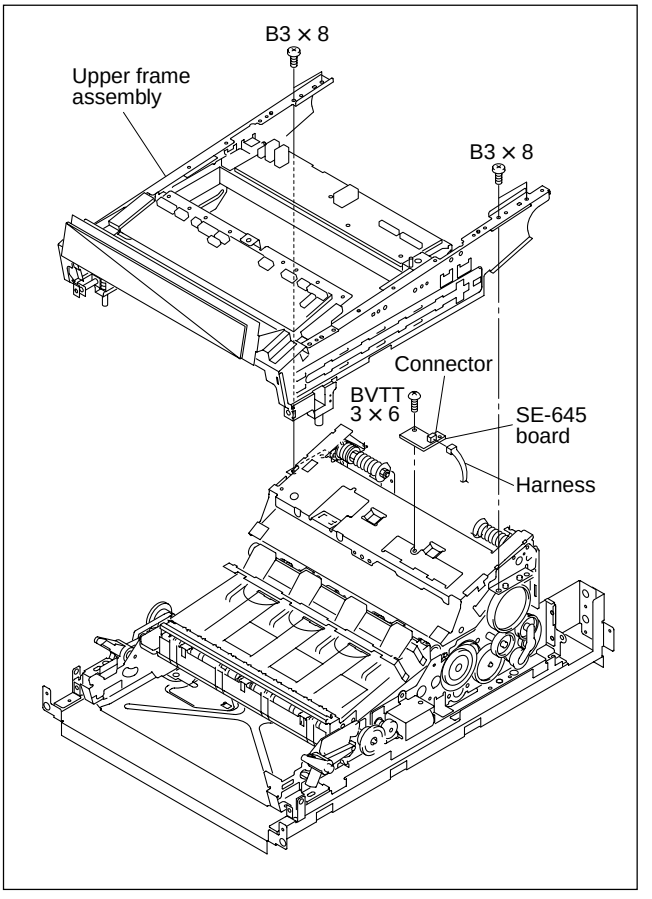

16. Remove the harnesses from the two clampers of the back frame assembly.
17. Remove the four screws and two dowels from the back frame, then remove the back frame assembly in the direction shown by the arrow.

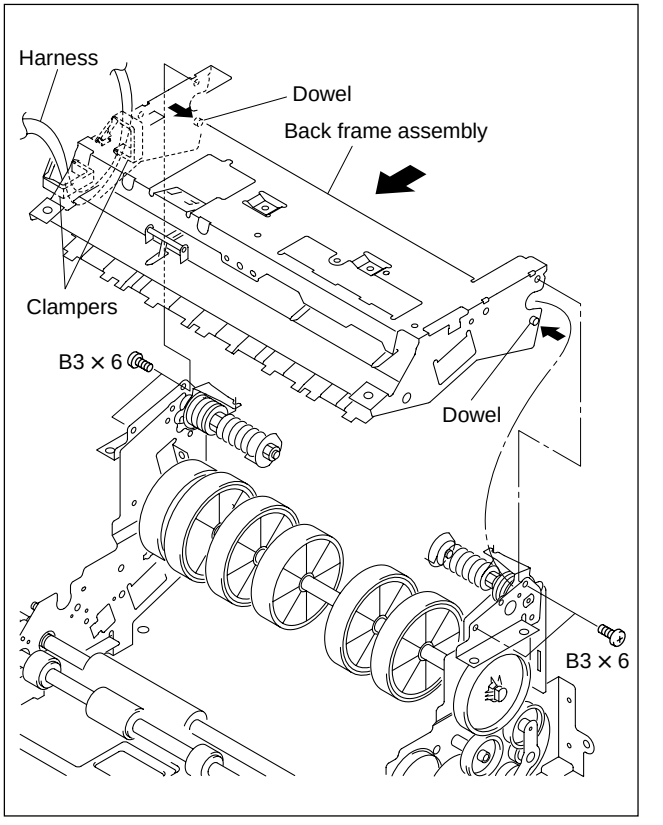

18. Remove the four screws, then remove the guide B.
19. Remove the four sub-rollers and four sub-roller springs from the guide B.
20. Remove the two guide springs, then remove the guide C.

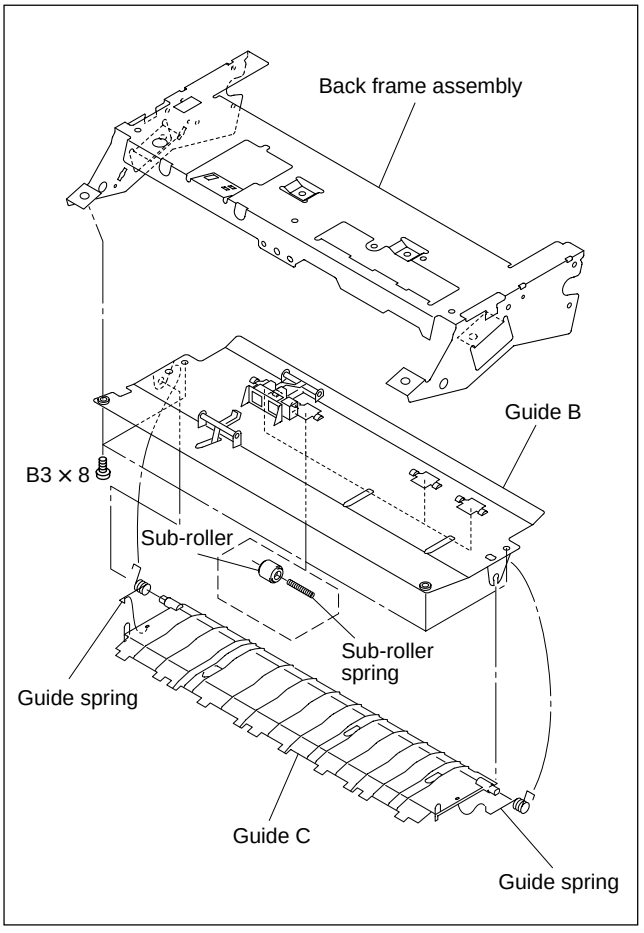

21. Attach the back frame assembly in the reverse order of steps 1 to 20.

2-8. Separation Roller Assembly

1. Remove the top cover sub-assembly. (Refer to Section 1-4-1.)
2. Remove the rear cover assembly. (Refer to Section 1-4-2.)
3. Remove the front panel (lower) assembly. (Refer to Section 1-4-3.)
4. Remove the side cover (L) assembly. (Refer to Section 1-4-3.)
5. Remove the side cover (R) assembly. (Refer to Section 1-4-4.)
6. Remove the main board assembly. (Refer to Section 2-1-2.)
7. Remove the cam motor sub-assembly. (Refer to Section 2-3.)
8. Remove the feed table assembly. (Refer to Section 2-4.)
9. Remove the cap motor assembly. (Refer to Section 2-5.)
10. Remove the motor holder assembly. (Refer to Section 2-6.)
11. Remove the back frame assembly. (Refer to Section 2-7.)
12. Remove the three retaining rings, then remove the pick up gear, pick up idler gear, gear (32-22) and gear (31-23).

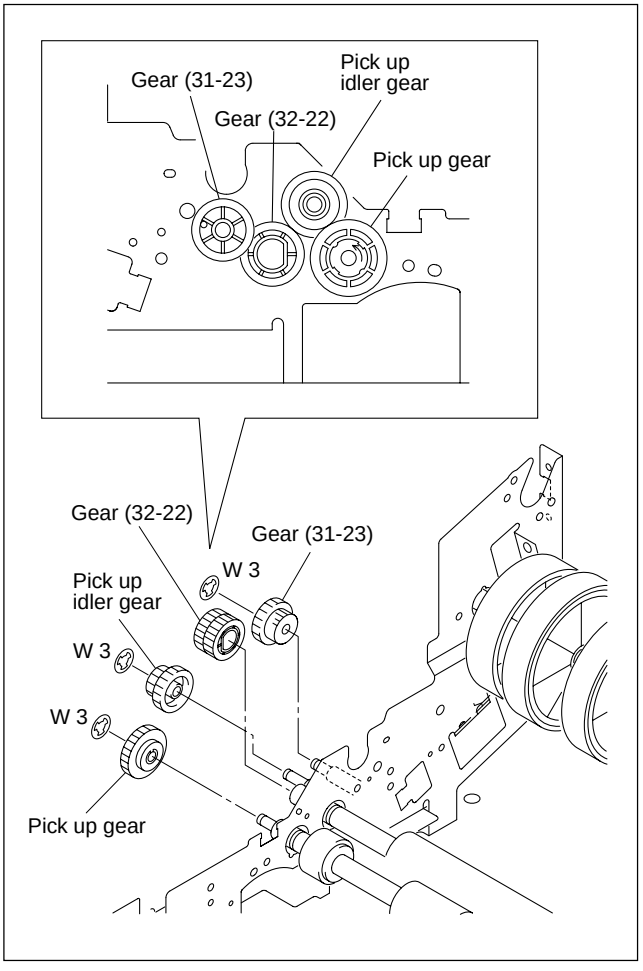

13. Remove the screw, then remove the AEDS9620 bracket.
14. Remove the two screws, then remove the PE sensor holder assembly.
15. Remove the two retaining rings and two bearings (8), then remove the spacer and pick up roller.
16. Remove the two retaining rings and two bearings (8), then remove the spacer and feed roller.

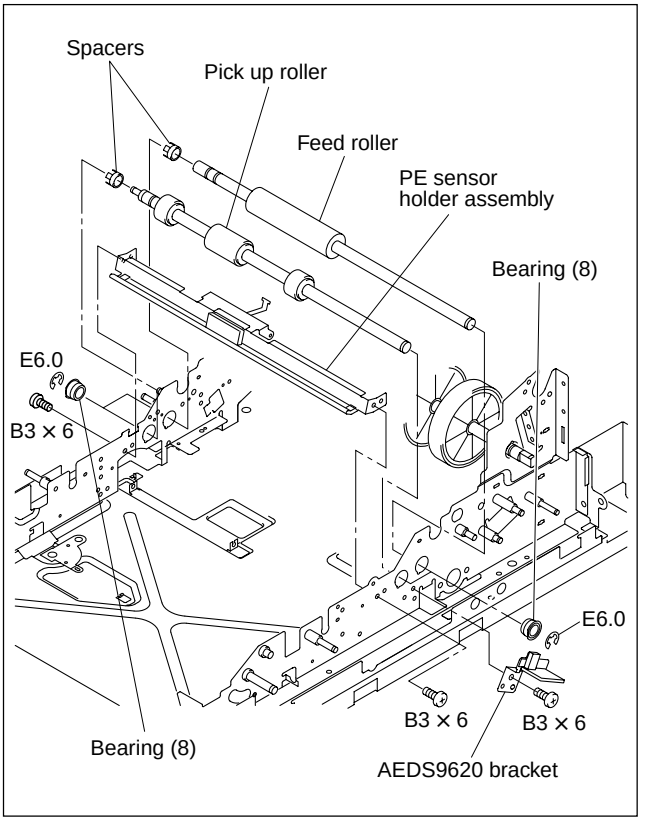

17. Remove the two screws, then remove the guide (A) assembly.
18. Disconnect the harness from the connector on the sensor board and remove the two screws, then remove the separation roller assembly.

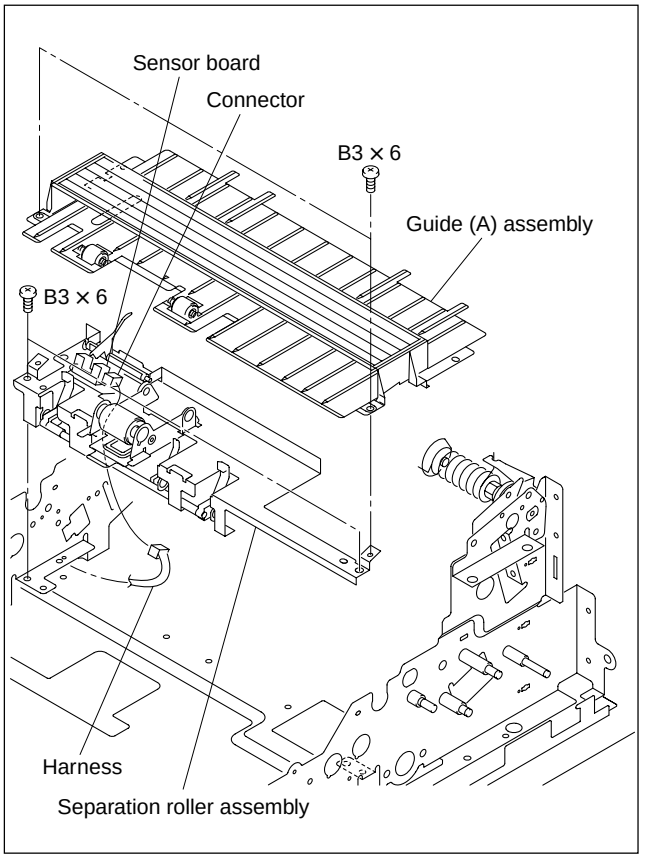

19. Remove the paper barrier arm from the separation roller chassis.
20. Remove the two retaining rings, then remove the support shaft.
21. Remove the helical extension spring, then remove the separation roller bracket.
22. Remove the two screws and two bearings, then remove the separation roller and separation roller shaft.

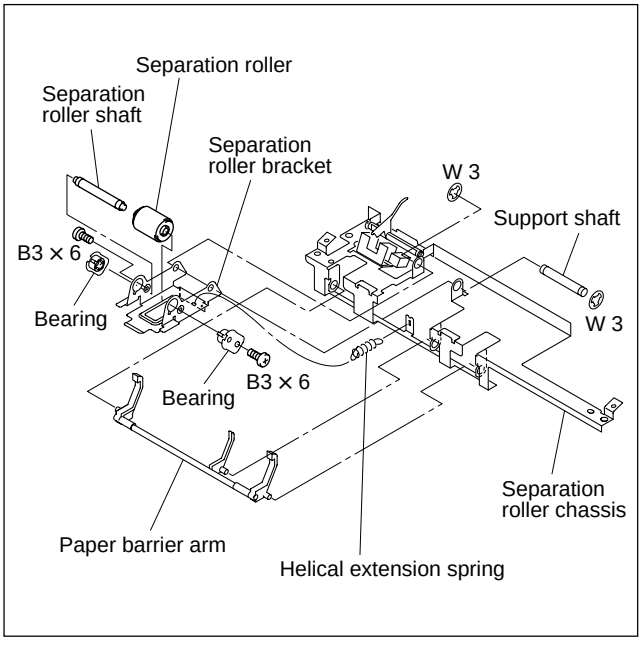

23. Attach the separation roller assembly in the reverse order of steps 1 to 22.

2-9. Transport Motor Assembly

1. Remove the top cover sub-assembly. (Refer to Section 1-4-1.)
2. Remove the rear cover assembly. (Refer to Section 1-4-2.)
3. Remove the front panel (lower) assembly. (Refer to Section 1-4-3.)
4. Remove the side cover (L) assembly. (Refer to Section 1-4-3.)
5. Remove the side cover (R) assembly. (Refer to Section 1-4-4.)
6. Remove the main board assembly. (Refer to Section 2-1-2.)
7. Remove the cam motor sub-assembly. (Refer to Section 2-3.)
8. Remove the feed table assembly. (Refer to Section 2-4.)
9. Remove the cap motor assembly. (Refer to Section 2-5.)
10. Remove the motor holder assembly. (Refer to Section 2-6.)
11. Remove the back frame assembly. (Refer to Section 2-7.)
12. Remove the separation roller assembly. (Refer to Section 2-8.)
13. Remove the drive belt.
14. Remove the two screws and disconnect the harness from the connector on the SU-74 board, then remove the transport motor assembly.

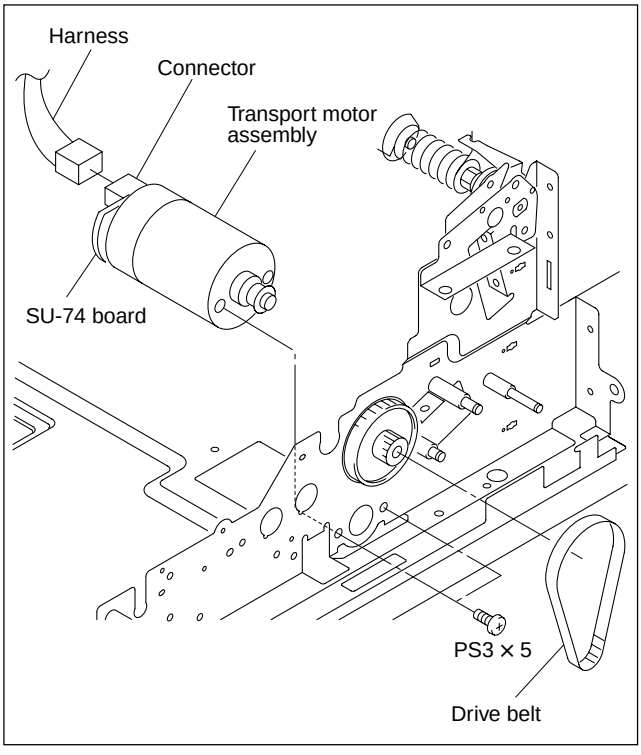

15. Attach the transport motor assembly in the reverse order of steps 1 to 14.

Section 3
Service Mode

The service mode of this unit can be used to confirm the mechanical operation.

Hierarchy of service mode

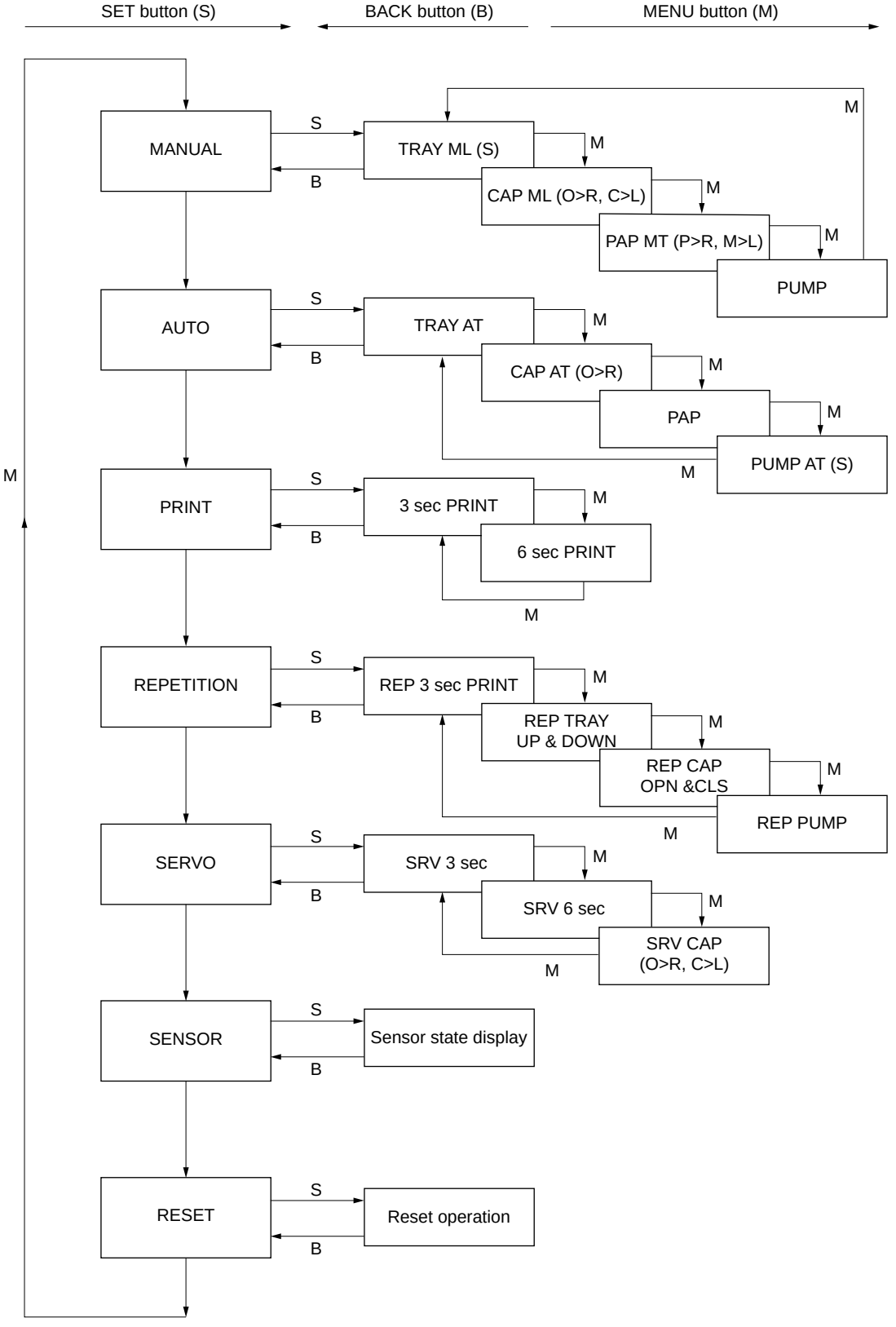

3-1. Service Mode

3-1-1. Description of Buttons

MENU (menu) button:	Displays a menu on the display panel (referred to as LCD hereinafter). Moves the same hierarchy in a menu.
SET (determine) button:	Starts, stops, and sets the operation. Moves to the hierarchy below the current one.
BACK (return) button:	Moves to the hierarchy above the current one. Stops the operation.
←, → button:	Changes the setting item displayed on the LCD. Starts and stops the operation.

3-1-2. Starting the Service Mode

1. Check that the cleaning unit closes. (Cap_Home sensor)
2. Disconnect the connector from the Cap_Pos sensor.
3. Turn on the power switch while pressing the ON/STANDBY button on the panel.
4. Check that the service mode starts.
5. Connect the connector to the Cap_Pos sensor.

3-1-3. Confirming the Sensor

1. Press the “MENU” button and select “SENSOR (sensor)” you want to confirm.
2. Press the “SET” button.
3. The LCD display changes to “0 ⇔ 1” by interrupting a sensor.
   Interrupting the sensor

   Note

   Be careful not to damage it when interrupting a sensor.

   A sensor is interrupted using a small photointerrupter or paper (thick paper) according to the sensor to be interrupted.

Location on the LCD panel

31	30	29	28	27	26	25	24	23	22	21	20	19	18	17	16
15	14	13	12	11	10	9	8	7	6	5	4	3	2	1	0

Position	Sensor name	State
0	Cap_Cls	1: Closed 0: Indefinite
1	Cap_Pos	–
2	Cap_Open	1: Open 0: Indefinite
3	Tray_Pos	–
4	Paper_DET2	1: Not exist 0: Exists

Position	Sensor name	State
5	Size_S	1: Not exist 0: Exists
6	Size_M	1: Not exist 0: Exists
7	Size_L	1: Not exist 0: Exists
8	Pap_Emp	1: Not exist 0: Exists
9	Reserved	–
10	NoCartridge	1: Closed 0: Open
11	Set_Open	1: Closed 0: Open
12	Manu_Feed	1: Not exist 0: Exists
13	Reserved	–
14	POWER/STANDBY SW.	1: OFF 0: ON
15	Paper_Det1	1: Not exist 0: Exists
16	MENU SW	1: OFF 0: ON The “POWER/STANDBY” indicator lights in orange.
17	← switch	1: OFF 0: ON The “POWER/STANDBY” indicator lights in green.
18	SET switch	1: OFF 0: ON The “READY” indicator lights in red.
19	→ switch	1: OFF 0: ON The “READY” indicator lights in green.
20	DUMMY_JET	The empty discharge position is obtained when 0 changes to 1. (0: Closed, 1: Open)
21	Enc_A	–
22	Enc_B	–
23	Pump_Pos	1: Origin (The accurate origin is obtained when 0 changes to 1.)
24	Cap_Det	1: Exists 0: No exist
25	Reserved	–
26	Reserved	–
27	Reserved	–
28	Reserved	–
29	Reserved	–
30	Reserved	–
31	Reserved	–

3-1-4. Confirmation of Motor Operation

1. Press the “MENU” button and select “MANUAL”.
2. Press the “SET” button.
   - TRAY ML (S): Press the “SET” button. The link motor rotates. Press the “SET” button again to stop the rotation of the link motor.
   - CAP ML: The cap is opened using a → button.
     The cap is closed using a ← button.
   - PAP ML: The carrier motor begins to rotate in the forward direction using a → button.
     Press the button again to stop the rotation.
     The carrier motor begins to rotate in the reverse direction using a ← button.
     Press the button again to stop the rotation.
   - PUMP ML (S): Press the “SET” button. The pump motor begins to rotate. Press the “SET” button again to stop the rotation.

3-1-5. Confirmation of Paper Feed Operation (A print is not done in this case.)

1. Press the “MENU” button and select “PRINT”.
2. Press the “MENU” button, select “3 sec PRINT”, and press the “SET” button.
   The paper feed can be confirmed for three seconds.
3. Press the “MENU” button, select “6 sec PRINT”, and press the “SET” button.
   The paper feed can be confirmed for six seconds.

3-1-6. Mechanical Reset (Restart)

1. Press the “MENU” button and select “RESET”.
2. Press the “SET” button.
   This unit is reset and restarted.

3-2. Upgrading

3-2-1. Confirmation of Version

1. Enter URL below and confirm the firmware version.
   http://[IP address of this unit]/index_admin.html

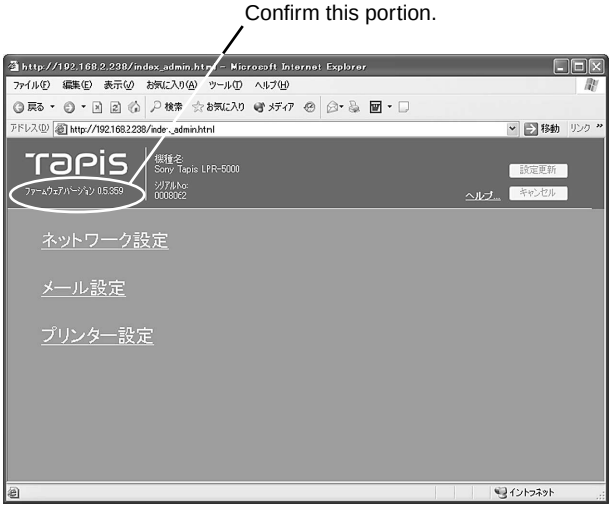

3-2-2. Upgrading

Required equipment

- Personal computer (PC)
- Network cable (Cross)
- Dedicated software (sendlpr)
- Firmware file

Preparation

1. Connect this unit and PC using a network cable (cross).
2. Turn on the power to PC and this unit.
3. Copy dedicated software (sendlpr) to the arbitrary position of PC.

Upgrading

1. Confirm that “READY” is displayed on the LCD panel of this unit.
2. Start Sendlpr.

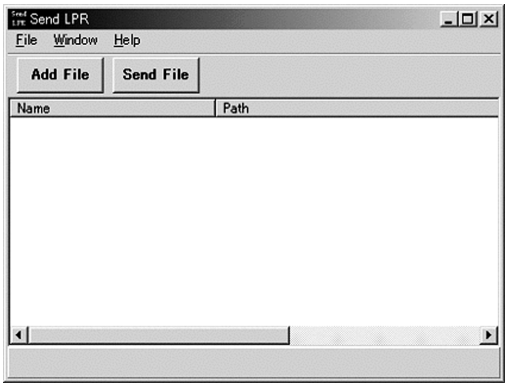

3. Press the “Add File” button and select a firmware file. (File name: tapisxxxx.prg (“xxxx” indicates the version.)

4. Select the firmware software and press the “SendFile”.

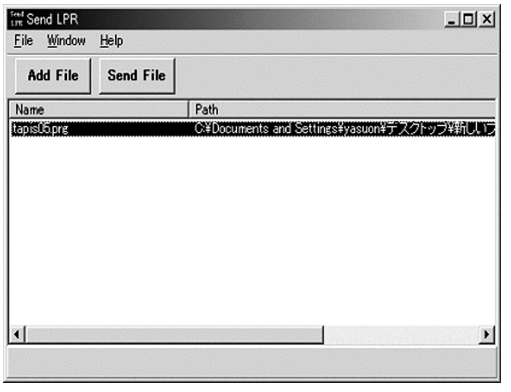

5. Enter the IP address of this unit and press the “OK” button.

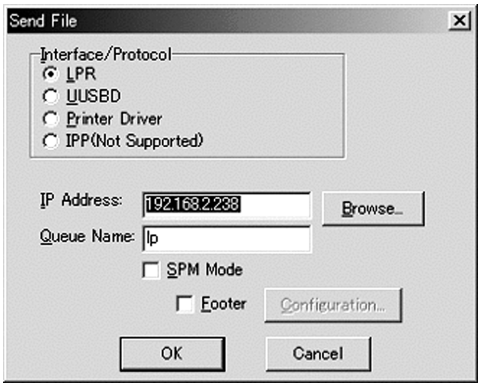

6. Confirm that the LCD display of this unit changes from “LOADING” to “READY”. (Termination display)
7. Turn off the main power (on the rear panel of this unit) and then turn on it again after about ten seconds.
8. “Reread” the browser and confirm that the version was changed.

Section 4
Troubleshooting

4-1. Error Code

Error code	Contents of error	Detection conditions	Place (block) to be supposed
004	I/F time-out to DSP	During print	System control block on CPU-357 board DSP on CPU-347 board
006	State transition error of system	At all times	Mechanical block System control block on CPU-357 board Mechanical control block on MEC-21 board Defective connection of harnesses
013	DSP initialization error	Before print	System control block on CPU-357 board DSP on CPU-347 board
047	No response is sent from the mechanical control block during initialization.	During power ON	System control block on CPU-357 board Mechanical control block on MEC-21 board Defective connection of harnesses
051	Circulating pump error	During pump operation	Mechanical block (Pump) Mechanical block on MEC-21 board Defective connection of harnesses
145	The heater current exceeding the prescribed value flows during non-operation.	Except during print execution	Head cartridge Power supply
146	Head cartridge ink leak	During print	Head cartridge Power supply
147	Failure in head cartridge communication	During print	Head cartridge System control block on CPU-357 board Defective connection of harnesses

4-2. Electrical Troubleshooting

Notes

In the troubleshooting of this section, specify the cause of a failure according to each symptom after confirming the items below.

- Connect the connectors around the MEC-21 board.
- Connect the connectors on the SW-1105 board.
- Connect the connectors in a power module.

4-2-1. Power cannot be turned on

Symptom

- The power cannot be turned on even if the power switch is set to ON.
- All LEDs on the front panel of this unit remain OFF.
- Nothing appears on the LCD display panel on the front panel of this unit.
- The LINK/ACT LED indicator on the rear panel of this unit remains OFF.
- A motor does not operate.

Trouble: After the unit is left unattended for about 20 minutes with the power turned off, the LED lights or the LCD display panel is displayed when the power switch is set to ON. After that, the power output is turned off with the timing when a motor operates.

Cause: Short-circuit of the power system in a head cartridge
Short-circuit of a motor circuit
- Defective motor
- Defective harness connected to a motor and biting by a chassis
- Defective motor driver circuit on MEC-21 board

Remedy: Check the power system of the board in a head cartridge.
Replace the head cartridge.
Check the motor harness and replace it as required.
Check the MEC-21 board and replace it as required.

Trouble: After the unit is left unattended for about 20 minutes with the power turned off, all LEDs momentarily light when the power switch is set to ON. Immediately after that, the power output is turned off.

Cause: Short-circuit of a logic power (3.3 V/5 V) system on the side of this unit
Defective boards
Short-circuit of a power harness and biting of harnesses by a chassis
Short-circuit of the power terminal in a flexible flat cable

Remedy: Check the power harness in this unit and replace it as required.
Check the flexible flat cable in this unit and replace it as required.
Check the power system of each board in this unit and replace it as required.

Trouble: After the system is left unattended for about 20 minutes with the power turned off, the LED blinks and lights or the LCD display panel is displayed when the power switch is set to ON with the head cartridge removed. After that, the system control software on the CPU-357 board and the mechanical control software on the MEC-21 board operate.

Cause: Short-circuit of the power system in a head cartridge

Remedy: Check the power system of the board in a head cartridge.
Replace the head cartridge.

Trouble: After the unit is left unattended for about 20 minutes with the power turned off, the items below take place when the power switch is set to ON with the head cartridge removed.

- LED does not blink and light at all.
- Nothing appears on the LCD display panel.
- A motor does not operate.

Cause: Defective power supply
Out of the range of an AC input voltage on the primary side (240 V)

Remedy: Confirm the AC input voltage.
Replace the power supply.

4-2-2. Nothing appears on the LCD display panel even if the power state is changed from OFF to ON

Trouble: All LEDs remain OFF even if the power state is changed from OFF to ON. Moreover, the LINK/ACT LED indicator on the rear panel of this unit remains OFF even when an Ethernet cable is connected.

Cause: A reset signal is not output normally.

- Defective reset circuit on CPU-357 board
- Defective power system on CPU-347 board

Remedy: Check the CPU-357 board and replace it as required.
Check the CPU-347 board and replace it as required.

Trouble: All LEDs on the front panel of this unit remains OFF even if the power state is changed from OFF to ON. However, the LINK/ACT LED indicator on the rear panel of this unit light and blink when an Ethernet cable is connected.

Cause: A reset signal does not reach the MEC-21 board.

- Defective MEC-21 board
- Defective connection of IF-881FPC

Remedy: Check the connection of IF-881FPC and replace it as required.
Check the MEC-21 board and replace it as required.

Trouble: All LEDs on the front panel of this unit light when the power state is changed from OFF to ON. After that, all LEDs remain ON. The LINK/ACT LED indicator on the rear panel of this unit remains OFF even if an Ethernet cable is connected.

Cause: The state of a reset signal is the reset output state.

- Defective reset circuit on CPU-357 board
- Defective power system on CPU-347 board
- Defective output of 3.3 V power

Remedy: Check the CPU-357 board and replace it as required.
Check the CPU-347 board and replace it as required.
Check the power supply voltage (3.3 V).

Trouble: All LEDs on the front panel of this unit light when the power state is changed from OFF to ON. After that, all LEDs remain ON. The LINK/ACT LED indicator on the rear panel of this unit lights and blinks when an Ethernet cable is connected.

Cause: A reset signal does not reach the MEC-21 board.

- Defective MEC-21 board
- Defective connection of IF-881FPC

Remedy: Check the connection of IF-881FPC and replace it as required.
Check the MEC-21 board and replace it as required.

Trouble: When the power state is changed from OFF to ON, all LEDs on the front panel of this unit light or all LEDs remain OFF. A printer can be accessed from the browser of PC when a personal computer (referred to as PC hereinafter) is connected to Ethernet. (WEB can be opened.)

Cause: The mechanical control software on the MEC-21 board does not operate.

- Defective MEC-21 board
- Defective connection of IF-881FPC

Remedy: Check the connection of IF-881FPC and replace it as required.
Check the MEC-21 board and replace it as required.

Trouble: The LCD display panel does not operate normally. (The LED on the front panel of this unit and the initial operation of mechanism operate normally when the power state is changed from OFF to ON. After that, the current state is shifted to the standby state when you press the ON/STANDBY button.)

Cause: Defective LCD display panel
Defective connection of an FPC connector on LCD display panel

Remedy: Check the connection of the LCD display panel and replace it as required.

Trouble: A printer cannot be accessed from the browser of PC even if PC and Ethernet are connected about 30 seconds after the power state is changed from OFF to ON. (WEB cannot be opened.)

Cause: The system control software on the CPU-357 board does not operate.

- Defective CPU-357 board
- Defective CPU-347 board

Remedy: Check the CPU-357 board and replace it as required.
Check the CPU-347 board and replace it as required.

Trouble: A printer cannot be recognized by the printer setting of PC even if PC and USB are connected about 30 seconds after the power state is changed from OFF to ON.

Cause: The system software on the CPU-357 board does not operate.

- Defective CPU-357 board
- Defective CPU-347 board

Remedy: Check the CPU-357 board and replace it as required.
Check the CPU-347 board and replace it as required.

4-2-3. The power output is turned off during start of initial operation or during initial operation when the power state is changed from OFF to ON

- All LEDs on the front panel of this unit remain OFF.
- Nothing appears on the LCD display panel on the front panel of this unit.
- The LINK/ACT LED indicator on the rear panel of this unit remains OFF.
- A motor stops.

Trouble: When the power state is changed from OFF to ON, all LEDs on the front panel of this unit light and a part of LEDs is turned off. After the LCD display panel is displayed, the power output is turned off as soon as a motor operates.

Cause: Short-circuit of the power system in a head cartridge
Short-circuit of a motor circuit
- Defective motor
- Defective harness connected to a motor or biting of harnesses by a chassis
- Defective block around the motor driver circuit on MEC-21 board

Remedy: Check the power system on the board in a head cartridge.
Replace the head cartridge.
Check the motor harness and replace it as required.
Check the MEC-21 board and replace it as required.

Trouble: When the power state is changed from OFF to ON, the LED on the front panel of this unit lights momentarily and the power output is turned off.

Cause: Short-circuit of a logic power (3.3 V/5 V) system on the side of this unit
- Defective boards
- Short-circuit of a power harness and biting of harnesses by a chassis
- Short-circuit of the power terminal in a flexible flat cable

Remedy: Check the power harness and replace it as required.
Check the connection of a flexible flat cable and replace it as required.

Trouble: When the power state is changed from OFF to ON, an abnormal sound is generated from the power supply and the power output is turned off.

Cause: Out of the range of an AC input voltage on the primary side
Defective power supply

Remedy: Confirm the AC input voltage.
Replace the power supply.

4-2-4. An error or comment is displayed during initial operation after the power state is changed from OFF to ON

Trouble: A motor does not operate during initial operation.

Cause: Defective motor circuit
- Defective connection of a motor and harness
- Biting of harnesses connected to a motor by a chassis
- Defective motor
- Defective motor driver circuit on MEC-21 board

Defective mechanical block

Remedy: Check the motor harness and replace it as required.
Check the motor and replace it as required.
Check the MEC-21 board and replace it as required.
Confirm the defective mechanical block.

Trouble: A motor operates during initial operation, but an error on the mechanical operation occurs.
Cause: Defective sensor circuit
- Defective connection of harnesses connected to each sensor
- Biting of harnesses connected to each sensor by a chassis
- Defective sensors
- Defective sensor signal input circuit on MEC-21 board

Defective mechanical block
Remedy: Check the harnesses connected to each sensor and replace them as required.
Check each sensor and replace it as required.
Check the MEC-21 board and replace it as required.
Confirm the defective mechanical block.

Trouble: A “No head cartridge” error is displayed.
Cause: Defective setting of a head cartridge
- Defective connection of a board-to-board connector

Defective head cartridge detection circuit
- Defective head detection circuit on CN-2393 board
- Defective IF-912 board
- Defective connection of DIO-73FPC

Remedy: Confirm the removal and insertion of a head cartridge.
Confirm the mechanical matching state of a head cartridge and this unit.
Check the IF-912 board in a head cartridge and replace it as required.
Check the connection of DIO-73FPC and replace it as required.
Check the CN-2393 board and replace it as required.

Trouble: An error on a head cartridge function is displayed.
Cause: Defect in a head cartridge
- Occurrence of ink leak
- Defective IF-912 board
- Defective HIF-14 board
- Defective head cartridge assembly

Remedy: Confirm the ink leak in a head cartridge.
Check the board in a head cartridge and replace it as required.
Check the mechanical structure in a head cartridge and replace it as required.
Replace the head cartridge.

Trouble: An error or comment on the remaining quantity of ink is displayed.
Cause: Ink is little left or no ink is left.
Occurrence of ink leak
Defective ink remaining quantity detection circuit
- Dirty or defective ink cartridge terminal
- Defective IE-57 board or dirty terminal
- Defective connection of IF-912 and IE-57 boards
- Defective IF-912 board

Remedy: Replace the ink cartridge.
Confirm the ink leak in a head cartridge.
Confirm the dirt in an ink cartridge terminal and remove it as required.
- Confirm the dirt in the terminal on the IE-57 board and remove it as required.
- Confirm the connection of IE-57 and IF-912 boards.
- Check the IE-57 board and replace it as required.
- Check the IF-912 board and replace it as required.

Trouble: A fetal error is displayed.
Cause: Defective electrical hardware that cannot be recovered
- Defective CPU-357 board
- Defective CPU-347 board
- Other defective electrical hardware

Defective mechanical block
Defective head cartridge
Remedy: Check the CPU-357 board and replace it as required.
Check the CPU-347 board and replace it as required.
Check the connection of each harness and replace it as required.
Check the connection of each flexible flat cable and replace it as required.
Check other electric boards and replace it as required.
Confirm the mechanical block and repair it.
Check the inside of a head cartridge and replace it as required.

Trouble: An error whose error code is specified occurs, and an error whose contents are displayed on the display panel occurs.
Cause: Refer to the error code list. (Refer to section 4-1.)
Conform to the contents displayed on the display panel.
Remedy: Check each factor.

4-2-5. The initial operation after the power state is changed from OFF to ON is normally terminated, but a printer cannot be accessed from PC

Trouble: The initial operation of a mechanical block is normally terminated, but the LINK/ACT LED indicator on the rear panel of this unit is turned off even if PC and Ethernet are connected.
Cause: Defective network
Defective Ethernet circuit on CPU-357 board
Remedy: Confirm the network operation.
Check the CPU-357 board and replace it as required.

Trouble: The initial operation of a mechanical block is terminated normally. However, even if PC and Ethernet are connected, a printer cannot be accessed from the browser of PC though the LINK/ACT LED indicator on the rear panel of this unit lights or blinks.
Cause: Defective network setting
Remedy: Confirm the setting of a network.

Trouble: The initial operation of a mechanical block is normally terminated, but a printer cannot be recognized by the printer setting of PC even if PC and USB are connected.
Cause: Defective USB-related software operation of PC
Defective USB circuit on CPU-357 board
Remedy: Restart PC or reconnect a printer.
Check the CPU-357 board and replace it as required.

4-2-6. The state of this unit is not normally shifted even if you press each button on the front panel of this unit after the initial operation is normally terminated and after "READY" is displayed.

Trouble: The response and display of this unit does not appear.
The response and display that differ from those during normal operation appear.
Cause: Defective button pressing detection circuit on FP-138 board
Remedy: Check the FP-138 board and replace it as required.

4-2-7. A test print or a print from PC is not normally done after the initial operation is normally terminated and after "READY" is displayed

Trouble: An error on the operation of a mechanical block is displayed.
- Motor-related error
- Sensor-related error

Cause: Defective motor circuit
- Defective connection of the harness connected to a motor
- Biting of the harnesses to a motor by a chassis
- Defective motor
- Defective motor driver circuit on MEC-21 board

Defective sensor circuit
- Defective connection of the harnesses connected to each sensor
- Biting of the harnesses connected to each sensor by a chassis
- Defective sensors
- Defective sensor signal input circuit on MEC-21 board

Defective mechanical block
Remedy: Check each motor harness and replace it as required.
Check each motor and replace it as required.
Check each sensor harness and replace it as required.
Check each sensor and replace it as required.
Check the MEC-21 board and replace it as required.
Confirm the mechanical block.

Trouble: A "No head cartridge" error is displayed.
Cause: Defective setting of a head cartridge
- Defective connection of a board-to-board connector

Defective head cartridge detection circuit
- Defective head detection circuit on CN-2393 board
- Defective IF-912 board
- Defective connection of DIO-73FPC

Remedy: Confirm the removal and insertion of a head cartridge.
Confirm the mechanical matching state of a head cartridge and this unit.
Check the IF-912 board in a head cartridge and replace it as required.
Check the connection of DIO-73FPC and replace it as required.
Check the CN-2393 board and replace it as required.

Trouble: An error on a head cartridge function is displayed.
Cause: Defect in a head cartridge
- Occurrence of ink leak
- Defective IF-912 board
- Defective HIF-14 board
- Defective head cartridge assembly

Remedy: Confirm the ink leak in a head cartridge.
Check the board in a head cartridge and replace it as required.
Check the mechanical structure in a head cartridge and replace it as required.
Replace the head cartridge.

Trouble: An error or comment on the remaining quantity of ink is displayed.
Cause: Ink is little left or no ink is left.
Occurrence of ink leak
Defective ink remaining quantity detection circuit
- Dirty or defective ink cartridge terminal
- Defective IE-57 board or dirty terminal
- Defective connection of IF-912 and IE-57 boards
- Defective IF-912 board

Remedy: Replace the ink cartridge.
Confirm the ink leak in a head cartridge.
Confirm the dirt in an ink cartridge terminal and remove it as required.
- Confirm the dirt in the terminal on the IE-57 board and remove it as required.
- Confirm the connection of IE-57 and IF-912 boards.
- Check the IE-57 board and replace it as required.
- Check the IF-912 board and replace it as required.

Trouble: A fetal error is displayed.
Cause: Defective electrical hardware that cannot be recovered
- Defective CPU-357 board
- Defective CPU-347 board
- Other defective electrical hardware

Defective mechanical block
Defective head cartridge

Remedy: Check the CPU-357 board and replace it as required.
Check the CPU-347 board and replace it as required.
Check the connection of each harness and replace it as required.
Check the connection of each flexible flat cable and replace it as required.
Check other electric boards and replace it as required.
Confirm the mechanical block and repair it.
Check the inside of a head cartridge and replace it as required.

Trouble: An error whose error code is specified occurs, and an error whose contents are displayed on the display panel occurs.
Cause: Refer to the error code list. (Refer to section 4-1.)
Conform to the contents displayed on the display panel.
Remedy: Check each factor.

Trouble: When print operation is done during connection of PC and Ethernet, the LINK/ACT LED indicator on the rear panel of this unit is turned off and the data transfer from PC stops.
Cause: Defective network
Defective Ethernet circuit on CPU-357 board
Remedy: Confirm the network operation.
Restart PC or the hub.
Restart a printer.
Check the CPU-357 board and replace it as required.

Trouble: When print operation is done during connection of PC and Ethernet, the data transfer from PC stops though the LINK/ACT LED indicator on the rear panel of this unit lights or blinks.
Cause: Defective network
Defective system control software on CPU-357 board
Remedy: Confirm the network operation.
Restart PC or the hub.
Restart a printer.
Check the CPU-357 board and replace it as required.

Trouble: The data transfer from PC stops when print operation is done during connection of PC and USB.
Cause: Defective USB-related software operation of PC
Defective USB circuit on CPU-357 board
Defective system control software on CPU-357 board
Remedy: Restart PC or reconnect a printer.
Restart a printer.
Check the CPU-357 board and replace it as required.

4-2-8. A test print or a print from PC was normally done after the initial operation is normally terminated and “READY” is displayed, but a problem occurs in the print image quality.

Trouble: Missing color occurs in one-chip units of a head.
Cause: Defective head assembly in a head cartridge
Remedy: Replace the head cartridge.

Trouble: The missing color of a thin line occurs in the vertical direction at fixed intervals.
Cause: Defective print data transfer system in this unit
- Defective connection of DIO-72 or DIO-73FPC
- Defective CN-2393 board
- Defective CPU-347 board

Defective setting of a head cartridge
- Defective connection of a board-to-board connector

Defective print data transfer system in a head cartridge

- Defective IF-912 board
- Defective head assembly

Remedy: Check the connection of DIO-72 or DIO-73FPC and replace it as required.
Check the CN-2393 board and replace it as required.
Check the CPU-347 board and replace it as required.
Confirm the removal and insertion of a head cartridge.
Confirm the mechanical matching state of a head cartridge and this unit.
Check the IF-912 board and replace it as required.
Replace the head cartridge.

Trouble: An irregular print occurs in the horizontal direction.
Cause: Defective mechanical block
Defective servo control of a paper feed motor

- Dirty encoder disk
- Defective connection of the harness connected to SE-643 board
- Defective sensor on SE-643 board
- Defective motor control circuit on MEC-21 board

Remedy: Confirm the mechanical block
Check the harness connected to the SE-643 board and replace it as required.
Check the dirt in an encoder disk.
Check the sensor on the SE-643 board and replace it as required.
Check the MEC-21 board and replace it as required.

Trouble: Defective concentration or irregular concentration occurs.
Cause: Refer to the troubleshooting for print quality.

4-3. Mechanical Troubleshooting

4-3-1. Troubles Displayed on LCD

1. Head unit

"Head cartridge replacement" display

Cause: Removed and damaged tube
Confirmation method: Remove the top cover and check it visually.
Remedy: Confirm the tube and replace the head unit assembly according to the tube state.

Cause: Defective flexible flat cable or connector
Confirmation method:
1. Remove the top cover and check the connector pin visually.
2. Confirm the disconnection and connection of a flexible flat cable.

Remedy:
1. Replace the head unit assembly if the connector pin is defective.
2. Reconnect the flexible flat cable or replace it.

Cause: Defective IF-912, IE-57, and HIF-14 boards
Confirmation method: Remove the top cover and confirm the dirt in ink.
Confirm each board electrically.
Remedy: Replace the relevant board if the IF-912 and IE-57 boards are defective.
Replace the head unit assembly if the HIF-14 board is defective.

"No head cartridge" display

Cause:
- The head unit assembly is not installed properly.
- The harness connected to a switching regulator is not connected properly.

Confirmation method: Reconnect the head unit assembly or harness and confirm the operation.
Remedy:
- Replace the relevant parts.
- Replace the head unit assembly if the connector is defective.

Cause: Defective contact of a flexible flat cable or connector or defective flexible flat cable or connector
Confirmation method:
1. Reconnect the flexible flat cable or connector and confirm the operation.
2. Remove the top cover and check the connector pin visually.
3. Confirm the disconnection and connection of a flexible flat cable.

Remedy:
1. Replace the head unit assembly if the connector pin is defective.
2. Replace the head unit assembly if the connector pin is defective.
3. Reconnect the flexible flat cable or replace it.

Cause: Defective IF-912, IE-57, and HIF-14 boards
Confirmation method:
- Remove the top cover and confirm the dirt in ink.
- Confirm each board electrically.

Remedy:
- Replace the relevant board if the IF-912 and IE-57 boards are defective.
- Replace the head unit assembly if the HIF-14 board is defective.

"Ink little left" and "No ink cartridge" displays (during ink cartridge replacement)

Cause: Defective contact point of IE-57 board and remaining quantity detection terminal
Confirmation method: Confirm the continuity to GND using a tester.
Remedy: Replace the board folder sub-assembly.

Cause: Sinking on the side of remaining quantity detection terminal
Confirmation method: Check the board folder sub-assembly visually and confirm the elasticity of the terminal.
Remedy: Replace the board folder sub-assembly.

Cause: Position shift on the GND side of remaining quantity detection terminal
Confirmation method: Check the board folder sub-assembly visually and confirm the position shift of GND.
Remedy: Return the GND terminal to the proper position.

Cause: Dust (foreign matter) at the contact point (terminal block) of ink cartridge and this unit
Confirmation method: Remove the ink cartridge and confirm whether dust (foreign matter) exists at a contact point (terminal block.)
Remedy: Remove dust (foreign matter) and wipe out the contact point (terminal block).

Cause: Defective IE-57 board
Confirmation method:
- Remove the top cover and confirm the dirt in ink.
- Confirm the IE-57 board electrically.

Remedy: Replace it if the IE-57 board is defective.

2. Carrier system

"Cleaning life" display

Cause: Wipe (cleaning) roller life
Remedy: Replace the head unit assembly.

"Waste ink capacity limit" display

Cause: Capacity limit of a waste ink absorbent
Remedy: Replace the reserver assembly.

"No paper" display

Cause:
1. Paper is not set.
2. Paper is not properly set as far as it will go.

Remedy:
1. Set paper.
2. Set paper properly.

"Improper paper size" display

Cause:
1. "Paper tray" for print setting is not set properly.
2. "Paper - size" for print setting is not set properly.
3. "Vertical - horizontal" for paper is not set properly.

Remedy: Set the items described above properly.

4-3-2. Trouble during Print

1. Head unit

Many white stripes exist.

Cause: Dust (foreign matter) or bubbles exist in the path through which ink flows.
Remedy: Supplement ink.

Cause: Dust adheres to the nozzle surface.
Remedy:
- Remove dust and confirm whether ink flows.
- Remove dust and install the nozzle properly.

Cause: Heater disconnection
Remedy:
- Wipe out the heater or clean it.
- Replace the head unit assembly.

Cause:
1. Pump failure
2. Cam failure

Confirmation method:
1. Remove the top cover and check it visually.
2. Release the sensor of the head cover and confirm whether the cam operates by cleaning.

Remedy:
1. Replace the head unit assembly.
2. Replace the cam motor sub-assembly in this unit.

Print is in the sparse (irregular) state.

Cause: The nozzle sheet comes off.
Remedy: Replace the head unit assembly.

Cause: Dust (foreign matter) or bubbles exist in the path through which ink flows.
Remedy:
- Clean the path.
- Supplement ink if the path is not improved by cleaning.

One color is not printed after cleaning is performed.

Cause:
1. Locked valve air
2. Valve blocked by dust
3. Defective valve operation
4. Bent valve needle

Remedy:
1. Supplement ink.
2. Replace the head unit assembly.
3. Replace the head unit assembly.
4. Replace the head unit assembly.

Cause: Defective flexible flat cable or connector

Confirmation method:
1. Remove the top cover and check the connector pin visually.
2. Confirm the disconnection and connection of a flexible flat cable.

Remedy:
1. Replace the head unit assembly if the connector pin is defective.
2. Reconnect the connector pin or replace it.

Cause: Defective IF-912 and HIF-14 boards

Confirmation method:
- Remove the top cover and confirm the dirt in ink.
- Confirm each board electrically.

Remedy:
- Replace the relevant board if the IF-912 board is defective.
- Replace the head unit assembly if the HIF-14 board is defective.

Cause: Ink does not exist in the path through which ink flows.

Confirmation method: Remove the top cover and confirm the ink.

Remedy: Supplement ink.

Cause: Defective pump

Confirmation method: Remove the top cover and check it visually.

Remedy: Replace the head unit assembly.

Two colors are all not printed after cleaning is performed.

Cause: Defective cam

Confirmation method: Release the sensor of the head cover and confirm whether the cam operates by cleaning.

Remedy: Replace the cam motor sub-assembly.

Cause: Defective contact of flexible flat cable or connector or defective flexible flat cable or connector

Confirmation method:
1. Reconnect the flexible flat cable or connector and confirm the operation.
2. Remove the top cover and check the connector pin visually.

Remedy:
1. Replace the head unit assembly if the connector pin is defective.
2. Replace the head unit assembly if the connector pin is defective.

Cause: Defective IF-912 and HIF-14 boards

Confirmation method:
- Remove the top cover and confirm the dirt in ink.
- Confirm each board electrically.

Remedy:
- Replace the relevant board if the IF-912 board is defective.
- Replace the head unit assembly if the HIF-14 board is defective.

Both ends are not printed (No color appears.)

Cause: Wipe life (Part of an image is not simultaneously printed in almost two colors (by a few millimeters).)

Remedy: Replace the cap assembly.

Cause: Dust (foreign matter) or bubbles exist in the path through which ink flows.

Remedy:
- Clean the path.
- Supplement ink if the path is not improved by cleaning.

The print color is shifted.

Cause:
1. Shifted head unit assembly position
2. Defective carrier system (Refer to “2. Carrier system” in this section.)

Confirmation method:
1. Check the position (gap) of the lock block and head unit assembly visually.
2. Refer to “2. Carrier system” in this section.

Remedy:
1. Set the head unit assembly properly.
2. Refer to “2. Carrier system” in this section.

The print color is not clear.

Cause: Wipe life (Two colors are not printed in part of an image (by a few millimeters)).
Remedy: Replace the cap assembly.

The inverted image partially appears in print.

Cause: Wire bond disconnection
Remedy: Replace the head unit assembly.

One color is not printed in width of approximately 2 cm.

Cause: Wire bond disconnection
Remedy: Replace the head unit assembly.

Cause: Ink full in head cleaning unit
Confirmation method: Confirm the leak state of ink.
Remedy: Replace the cap assembly.

Cause: Defective flexible flat cable or connector
Confirmation method:
1. Remove the top cover and check the connector pin visually.
2. Confirm the disconnection and connection of a flexible flat cable.

Remedy:
1. Replace the head unit assembly if the connector pin is defective.
2. Reconnect the flexible flat cable or replace it.

Notches appear in print in width of approximately 2 cm.

Cause: Wire bond disconnection
Remedy: Replace the head unit assembly.

Cause: Defective flexible flat cable or connector
Confirmation method:
1. Remove the top cover and check the connector pin visually.
2. Confirm the disconnection and connection of a flexible flat cable.

Remedy:
1. Replace the head unit assembly if the connector pin is defective.
2. Reconnect the flexible flat cable or replace it.

2. Carrier system

Color mixture appears at the beginning of the print surface.

Cause: Cleaning roller life
Remedy: Replace the cap assembly.

Cause: Defective wipe or defective blade operation
Remedy: Perform cleaning. Replace the cap assembly if the blade operation is not improved.

Cause: Defective cap motor
Remedy: Replace the cap motor assembly.

The print surface becomes dirty.

Cause: Capacity limit of a head cleaning unit
Remedy: Replace the cap assembly.

Print shading, running, and irregularity occur.

Cause: The specified paper is not used.
Remedy: Use the specified paper.

Print becomes blurred.

Cause: Capacity limit of a head cleaning unit
Remedy: Replace the cap assembly.

Cause: Much ink adheres to the nozzle surface.
Remedy: Clean the nozzle surface. Replace the head unit assembly if the nozzle surface is not improved.

White and color stripes appear in print.

Cause: Capacity limit of a head cleaning unit
Remedy: Replace the cap assembly.

Cause: Much ink adheres to the nozzle surface.
Remedy: Clean the nozzle surface. Replace the head unit assembly if the nozzle surface is not improved.

There is the place where no print is performed.

Cause: Capacity limit of a head cleaning unit
Remedy: Replace the cap assembly.

Cause: Much ink adheres to the nozzle surface.
Remedy: Clean the nozzle surface. Replace the cleaning roller if the nozzle surface is not improved.

The opposite side (back) of the print surface becomes dirty.

Cause: Capacity limit of a waste ink absorbent
Remedy: Replace the reserver assembly.

Paper feed stops during print.

Cause: Defective carrier belt
Remedy:
- Apply grease to the back of a carrier belt.
- Replace the slip board.

Cause: Defective carrier motor
Remedy: Replace the carrier motor.

Paper feed stops during print. (The tip of paper is clogged near a spur.)

Cause: Defective kicker operation
Remedy: Replace the paper kicker.

The concentration is irregular. (Irregular pitch)

Cause: Defective carrier belt
Remedy:
- Apply grease to the back of a carrier belt.
- Replace the slip board.

Cause: Shaft spring deformation
Remedy: Replace the spur assembly.

Cause: Defective encoder disk
Remedy: Replace the feed table assembly.

Paper is bent during print.

Cause: Shifted pulley position
Remedy: Replace the feed table assembly.

Cause: Pinch roller deformation
Remedy: Replace the pinch roller assembly.

Cause: Shifted main shaft and belt
Remedy: Replace the feed table assembly.

An image is printed obliquely.

Cause: Paper is not set properly.
Remedy: Set paper properly.

Cause: Shifted pulley position
Remedy: Replace the feed table assembly.

Cause: Pinch roller deformation
Remedy: Replace the pinch roller assembly.

Cause: Shifted main shaft or belt
Remedy: Replace the feed table assembly.

4-3-3. Trouble during Paper Feed (Carrier System)

Paper is not fed.

Cause: “Crumples” or “folds” exist in paper.
Remedy: Use “crumple” or “fold” free paper.

Cause: Harness disconnection
Confirmation method: Confirm the disconnection or connection of a harness.
Remedy: Reconnect the harness or replace it.

Cause: Defective mode motor
Remedy: Replace the mode motor.

Cause: Defective Paper_Emp sensor
Remedy: Replace the Paper_Emp sensor.

Cause: Defective Tray_Pos sensor
Remedy: Replace the Tray_Pos sensor.

Two or more sheets of paper are fed simultaneously.

Cause: Defective Tray_Pos sensor
Remedy: Replace the Tray_Pos sensor.

Paper feed stops near the inversion guide.

Cause: Defective carrier motor
Remedy: Replace the carrier motor.

Cause: Defective paper size sensor
Remedy: Replace the paper size sensor.

Cause: Defective cue sensor
Remedy: Replace the cue sensor.

4-3-4. Trouble during Paper Eject (Carrier System)

Paper feed stops during print. (The tip of paper is clogged near the spur.)

Cause: Defective paper kicker operation
Remedy: Replace the paper kicker.

The concentration is irregular. (Irregular pitch)

Cause: Defective carrier belt
Remedy:
- Apply grease to the back of a carrier belt.
- Replace the slip board.

Cause: Shaft spring deformation
Remedy: Replace the spur assembly.

Cause: Defective paper kicker
Remedy: Replace the paper kicker.

4-3-5. Trouble during Operation (Head Unit)

An ink cartridge cannot be installed smoothly.

Cause: Bent tank folder needle
Confirmation method: Remove the ink cartridge and check the bending of a needle visually.
Remedy: Replace the head unit assembly.

An ink cartridge cannot be installed.

Cause: Bent valve needle
Remedy: Replace the head unit assembly.

4-3-6. Other Troubles

Ink leaks.

Cause: Ink full in a cleaning unit
Confirmation method: Confirm the leak state of ink.
Remedy: Replace the cleaning unit.

Cause: Broken nozzle sheet
Confirmation method: Wipe out the nozzle sheet and check it visually.
Remedy: Replace the head unit.

Cause: Removed and damaged tube
Confirmation method: Remove the top cover and check the tube visually.
Remedy: Check the tube and replace the head unit according to the state of the tube.

Ink adheres to the paper.

Cause: Ink full in a cleaning unit
Confirmation method: Confirm the leak state of ink.
Remedy: Replace the cleaning unit.

Cause: Full absorbent of a table
Confirmation method: Check the absorbent state of a table visually.
Remedy: Replace the absorbent.

LPR-1000MD (CE) E
9-877-807-01

Sony Corporation
e-Print Company
Published by Sony Engineering Corporation

2004. 7 22
©2004

SONY®

Line Shot Printer

LPR-1000MD

SERVICE MANUAL
Volume 2 1st Edition

⚠警告

このマニュアルは，サービス専用です。
お客様が，このマニュアルに記載された設置や保守，点検，修理などを行うと感電や火災，人身事故につながることがあります。
危険をさけるため，サービストレーニングを受けた技術者のみご使用ください。

設置や保守，点検，修理などを行う前に，別冊のメンテナンスマニュアルVolume 1の「安全のために」と別冊のオペレーションマニュアルの「安全のために」を必ずお読みください。

⚠ WARNING

This manual is intended for qualified service personnel only.
To reduce the risk of electric shock, fire or injury, do not perform any servicing other than that contained in the operating instructions unless you are qualified to do so. Refer all servicing to qualified service personnel.

⚠ WARNUNG

Die Anleitung ist nur für qualifiziertes Fachpersonal bestimmt.
Alle Wartungsarbeiten dürfen nur von qualifiziertem Fachpersonal ausgeführt werden. Um die Gefahr eines elektrischen Schlages, Feuergefahr und Verletzungen zu vermeiden, sind bei Wartungsarbeiten strikt die Angaben in der Anleitung zu befolgen. Andere als die angegeben Wartungsarbeiten dürfen nur von Personen ausgeführt werden, die eine spezielle Befähigung dazu besitzen.

⚠ AVERTISSEMENT

Ce manual est destiné uniquement aux personnes compétentes en charge de l’entretien. Afin de réduire les risques de décharge électrique, d’incendie ou de blessure n’effectuer que les réparations indiquées dans le mode d’emploi à moins d’être qualifié pour en effectuer d’autres. Pour toute réparation faire appel à une personne compétente uniquement.

Table of Contents

Manual Structure

Purpose of this manual 3
Related manuals 3

5. Semiconductor Pin Assignments

6. Spare Parts

6-1. Notes on Repair Parts 6-1
6-2. Exploded Views 6-2
6-3. Electrical Parts List 6-22
6-4. Frame 6-49
6-5. Packing Materials & Supplied Accessories 6-49

7. Block Diagrams

Overall 7-2

8. Schematic Diagrams and Board Layouts

8-1. Schematic Diagrams 8-1
CN-2393 8-1
CPU-347 8-4
CPU-357 8-15
FP-138 8-33
MEC-21 8-34
SE-643 8-38
SE-644 8-38
SE-645 8-38
SE-646 8-38
SE-673 8-39
SE-674 8-39
SE-736 8-39
SE-737 8-39
SW-1105 8-39
Frame Wiring 8-40

8-2. Board Layouts 8-41
CN-2393 8-41
CPU-347 8-42
CPU-357 8-43
FP-138 8-44
MEC-21 8-45
SE-643 8-46
SE-644 8-46
SE-645 8-46
SE-646 8-46
SE-673 8-46
SE-674 8-46
SE-736 8-47
SE-737 8-47
SW-1105 8-47

Manual Structure

Purpose of this manual

This manual is the service manual Vol. 2 of LINE Shot Printer LPR-1000MD.
This manual describes the information on maintenance and the service information such as semiconductors, spare parts, block diagrams, schematic diagrams, and board layouts.

Related manuals

In addition to this “Service Manual Vol. 2”, this unit is provided with the manual below.

- **Service Manual Vol. 1 (Not supplied for products.)**
  Part No.: 9-877-807-11
  This manual describes the information on the maintenance of this unit, and the service information, parts replacement, service mode, and troubleshooting.

- **Operating Instruction (Supplied for products.)**
  Part No.: 3-207-760-11
  These manuals describes the information required for the actual management and operation of this unit.

- **“Semiconductor Pin Assignments” CD-ROM (Available on request)**
  This “Semiconductor Pin Assignments” CD-ROM allows you to search for semiconductors used in B&P Company equipment.
  Semiconductors that cannot be searched for on this CD-ROM are listed in the service manual for the corresponding unit. The service manual contains a complete list of all semiconductors and their ID Nos., and thus should be used together with the CD-ROM.
  Part number: 9-968-546-XX

Section 5
Semiconductor Pin Assignments

The following describes the semiconductor types used in this unit.
For semiconductors marked with page numbers in the index, refer to the corresponding pages in this section. However, in some cases incompatible types are also listed, therefore, when a part is to be replaced, also refer to the Spare Parts section.
In addition, for semiconductors with ID Nos., refer to the separate CD-ROM titled “Semiconductor Pin Assignments” (Sony Part No. 9-968-546-xx) that allows searching for parts by semiconductor type or ID No.
The semiconductors in the manual or on the CD-ROM are listed by equivalent types. Thus the external view or the index mark indication may differ from the actual type.
Pin assignments and block diagrams are based on the IC manufacturer’s data book.

本機に使用されている半導体型名の一覧を下記に示します。索引中，ページが記載されている半導体は，本章の該当ページを参照してください。ただし，互換性のない型名を併記している場合がありますので，部品を交換するときは，Spare Partsの章を参照してください。
また，ID番号が記載されている半導体は，別途発行の “Semiconductor Pin Assignments” CD−ROM版(ソニー部品番号：9−968−546−xx)を参照してください。
半導体型名またはID番号から検索ができます。
マニュアルまたはCD−ROMに掲載されている半導体は，それぞれの機能を等価的に表わしたものです。
外観やインデックスマークの表示方法が実物と異なる場合があります。
ピン配置およびブロック図はICメーカーのデータブックに従いました。

DIODE — **Page or ID No.**

1SS352 ..... DC008-02
1SS352-TPH3 ..... DC008-02
1SS355TE-17 ..... DC008-02
1SS362-TE85L DC001-01

DF2S12FU(TPH3) DC008-04

MA111-(K8).S0 ..... DC008-01
MA111-TX DC008-01

PGB0010603NR 5-2

RB060L-40TE25 ..... DC007-01
RB083L-20TE25 ..... DC008-02
RB521S-30-TE61 ..... DC008-02
RB715F DC001-03
RB715F-T106 ..... DC001-03

LED — **Page or ID No.**

CL-190G-CD-T LC004-01
CL-190Y-CD-T LC004-01

TLGE1005B(T03) LC008-03
TLRE1005B(T03) LC008-03
TLYE1005B(T03) LC008-03

TRANSISTOR — **Page or ID No.**

2SA1162G TC001-01
2SA812-T1-M5M6 ..... TC001-01
2SC1623 ..... TC001-02
2SC1623-T1-L5L6 ..... TC001-02
2SC2873Y-TE12L TC002-02

TRANSISTOR — **Page or ID No.**

2SC2873Y-TE12R TC002-02
2SC4617R TC001-02
2SC4617TL-QR TC001-02

DTA123JE TC001-04
DTA123JE-TL TC001-04
DTC123JE TC001-03
DTC123JE-TL TC001-03

SI4425DY-T1 ..... TC012-04
SI9426DY-T1 ..... TC012-06

IC — **Page or ID No.**

78Q2120-64CGT/LF 5-3

A3952SLB-TR 5-4
A3959SLBTR 5-3

BA033FP L78M05T-FA
BA033FP-E2 ..... L78M05T-FA
BA05FP L78M05T-FA
BA05FP-E2 ..... L78M05T-FA
BA25BC0FP-E2 ..... BA18BC0FP-E2
BA25BC0FP-TE2 ..... BA18BC0FP-E2
BU2090FS-E2 ..... BU2090FS-E2

CXD9168GB 5-6
CXD9181R 5-5
CY2305SC-1HT CY2305SC-1HT

EDS2508APTA-75 5-4
EDS2516APTA-75 5-4
EPM7064BTC44-7 ..... EPM7064TC44-7
EPM7128BTC100-7 ..... EPM7128STC100-7

Index, Diode

DIODE

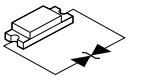

PGB0010603NR

IC	Page or ID No.
HD6417750SBP200	5-8
LC65F1306A-4M30-E	5-7
LC65F1306AU-MF-TL-E	5-7
LT1764EQ-E2	5-9
LT1963EQ-E2	5-9
LTC1624IS8	5-9
LTC1624IS8-E2	5-9
M25P10-AVMN6T	5-9
M37905F8CFP	5-10
M4A3-128/64-10VC	M4A3-128_64-10VC
M62354GP-75ED	5-10
M62354GP75ED	5-10
M66590FP	5-11
MAX336CAI-T	5-10
MBM29DL324BE-90PFTN	MBM29DL324BD-90PFTN
P2010AF-08TR	5-11
PM-44IX	5-12
RTC-4574JE	RTC4574JE-TP
RTC4574JE-TP	RTC4574JE-TP
S-80840CNNB-B8ZT2G	S-80840CNNB-B8Z-T2
SN74LV02APWR	TC74HC02P
SN74LV244APWR	TC74HC244P
SN74LV541APWR	MC74HC541N
SN74LVC16244ADGGR	IDT74FCT16244ATPV
SN74LVC244APWR	TC74HC244P
SN74LVC245APW(E20)	TC74HC245P
SN74LVC245APWR	TC74HC245P
SN74LVC74APWR-12	TC74HC74P
SN74LVCC4245APWR	74LVX4245QSCX
SN74LVCH16245ADGGR	IDT74FCT16245ATPV-TR
TC74HC4052AFT(EL)	MC74HC4052N
TC74VHC00FT(EL)	TC74HC00P
TC74VHC02FT(EL)	TC74HC02P
TC74VHC14FT(EL)	TC74HC14P
TC74VHC153FT(EL)	TC74HC153P
TC74VHC32FT(EL)	TC74HC32P
TC74VHC540FT(EL)	MC74HC540N
TC74VHCT08AFT(EL)	TC74HC08P
TC74VHCT541AFT(EL)	MC74HC541N
TC7SH08FU(TE85R)	TC7S08F
TC7SH08FU-TE85R	TC7S08F
TC7SH14FU-TE85R	TC7S14FU
TC7SH86FU(TE85R)	TC7S86FU
TC7SH86FU-TE85R	TC7S86FU
TPS2013ADR	5-12
TPS3823-33DBVR	TPS3823-33DBVR
UPC393G2	UA393DC
UPC393G2-E2	UA393DC

OTHER	Page or ID No.
RPI-352	MR010-07

IC

78Q2120-64CGT/LF (TDK SEMI)

10BASE-T/100BASE-TX ETHERNET TRANSCEIVER
—TOP VIEW—

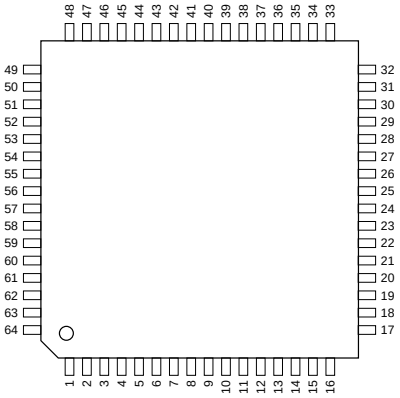

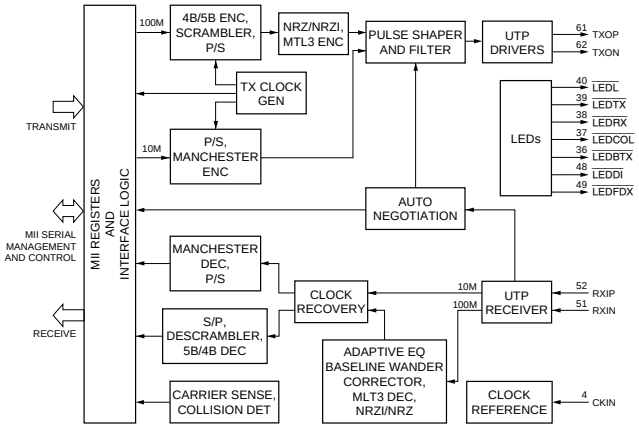

PIN NO.	I/O	SIGNAL	PIN NO.	I/O	SIGNAL	PIN NO.	I/O	SIGNAL	PIN NO.	I/O	SIGNAL
1	I	ISODEF	17	I/O	MDIO	33	O	COL	49	O	$\overline{\text{LEDFDX}}$
2	I	ISO	18	I	MDC	34	O	CRS	50	I	RPTR
3	—	GND	19	O	RXD3	35	O	INTR	51	I	RXIN
4	I	CKIN	20	O	RXD2	36	O	$\overline{\text{LEDBTX}}$	52	I	RXIP
5	—	GND	21	O	RXD1	37	O	$\overline{\text{LEDCOL}}$	53	—	GND
6	I	$\overline{\text{RST}}$	22	O	RXD0	38	O	$\overline{\text{LEDRX}}$	54	I/O	RIBB RET
7	I	PWRDN	23	O	RX DV	39	O	$\overline{\text{LEDTX}}$	55	—	GND
8	—	Vcc	24	O	RX CLK	40	O	$\overline{\text{LEDL}}$	56	I/O	RIBB
9	—	GND	25	O	RX ER	41	—	Vcc	57	—	Vcc
10	—	GND	26	I	TX ER	42	—	GND	58	I	XTLN
11	—	Vcc	27	O	TX CLK	43	—	Vcc	59	O	XTLP
12	I	PHYAD4	28	I	TX EN	44	I	TECH2	60	—	GND
13	I	PHYAD3	29	I	TXD0	45	I	TECH1	61	O	TXOP
14	I	PHYAD2	30	I	TXD1	46	I	TECH0	62	O	TXON
15	I	PHYAD1	31	I	TXD2	47	I	ANEGA	63	—	Vcc
16	I	PHYAD0	32	I	TXD3	48	O	$\overline{\text{LEDBT}}$	64	I	PCSBP

INPUTS

ANEGA : AUTO-NEGOTIATION ABILITY
CKIN : CLOCK INPUT
ISO : ISOLATE
ISODEF : ISOLATE DEFAULT
MDC : MANAGEMENT DATA CLOCK
PCSBP : PCS BYPASS
PHYAD0 - PHYAD4 : PHY ADDRESS
PWRDN : POWER DOWN
RPTR : REPEATER MODE
$\overline{\text{RST}}$: RESET
RXIN, RXIP : RECEIVE INPUT
TECH0 - TECH2 : TECHNOLOGY ABILITY/SELECT
TX EN : TRANSMIT ENABLE
TX ER : TRANSMIT ERROR
TXD0 - TXD3 : TRANSMIT DATA
XTLN : CRYSTAL OSCILLATOR

OUTPUTS

COL : COLLISION DETECT
CRS : CARRIER SENSE
INTR : INTERRUPT
$\overline{\text{LEDBT}}$: LED 10BASE-T
$\overline{\text{LEDBTX}}$: LED 100BASE-TX
$\overline{\text{LEDCOL}}$: LED COLLISION
$\overline{\text{LEDFDX}}$: LED FULL DUPLEX
$\overline{\text{LEDL}}$: LED LINK
$\overline{\text{LEDRX}}$: LED RECEIVE
$\overline{\text{LEDTX}}$: LED TRANSMIT
RX CLK : RECEIVE CLOCK
RX DV : RECEIVE DATA VALID
RX ER : RECEIVE ERROR
RXD0 - RXD3 : RECEIVE DATA
TX CLK : TRANSMIT CLOCK
TXON, TXOP : TRANSMIT OUTPUT
XTLP : CRYSTAL OSCILLATOR

INPUTS/OUTPUTS

MDIO : MANAGEMENT DATA
RIBB : BIAS CURRENT SETTING RESISTOR
RIBB RET : BIAS CURRENT SETTING RESISTOR RETURN

A3959SLBTR (ALLEGRO)

FULL BRIDGE MOTOR DRIVER
—TOP VIEW—

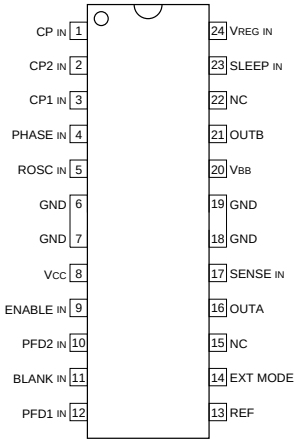

INPUTS

BLANK : BLANKING CONTROL
CP : RESERVOIR CAPACITOR
CP1, CP2 : CHARGE PUMP CAPACITOR
ENABLE : ENABLE
EXT MODE : PWM MODE CONTROL
PFD1, PFD2 : FAST DECAY
PHASE : DIRECTION CONTROL
REF : REFERENCE
ROSC : OSCILLATOR RESISTOR
SLEEP : SLEEP
VREG : REGULATOR DECOUPLING CAPACITOR

OUTPUTS

OUTA, OUTB : DMOS BRIDGE OUTPUTS

OTHERS

NC : NO CONNECTION
VBB : POWER SUPPLY FOR LOAD

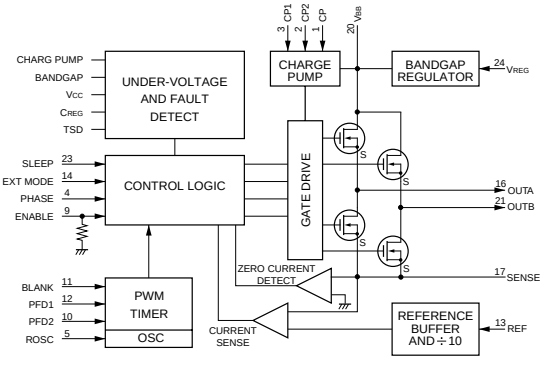

A3952SLB-TR (ALLEGRO)

FULL BRIDGE MOTOR DRIVER
—TOP VIEW—

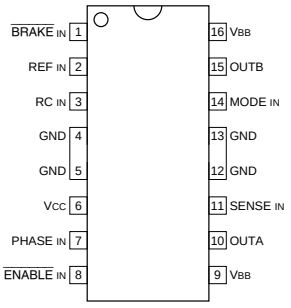

INPUTS

BRAKE	:	BRAKE
ENABLE	:	ENABLE
MODE	:	MODE SELECT
PHASE	:	PHASE
RC	:	RESISTOR AND CAPACITOR CONNECTION
REF	:	REFERENCE VOLTAGE
SENSE	:	SENSE

OUTPUTS

OUTA, OUTB	:	OUTPUT

OTHER

VBB	:	POWER SUPPLY FOR LOAD

BRAKE	ENABLE	PHASE	MODE	OUTA	OUTB	OPERATING MODE
1	1	×	1	HI-Z	HI-Z	SLEEP
1	1	×	0	HI-Z	HI-Z	STANDBY
1	0	1	1	1	0	NORMAL, FAST-DECAY
1	0	1	0	1	0	NORMAL, SLOW-DECAY
1	0	0	1	0	1	REVERSE, FAST-DECAY
1	0	0	0	0	1	REVERSE, SLOW-DECAY
0	×	×	1	0	0	BRAKE, FAST-DECAY
0	×	×	0	0	0	BRAKE, NO CURRENT CONTROL

0 : LOW LEVEL
1 : HIGH LEVEL
× : DON'T CARE
HI-Z : HIGH IMPEDANCE

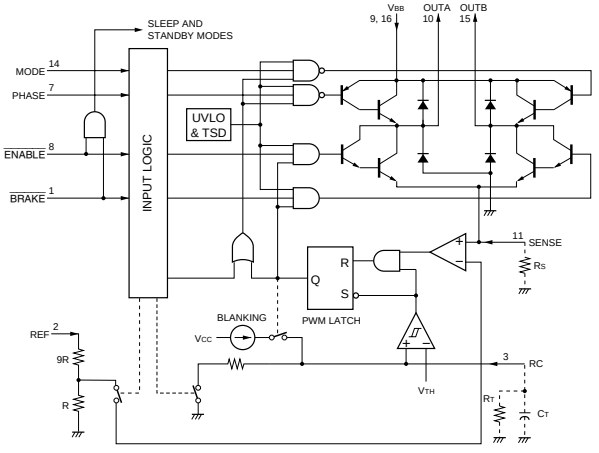

EDS2508APTA-75 (ELPIDA)

256M (33554432 × 8) -BIT 4BANKS SDRAM
—TOP VIEW—

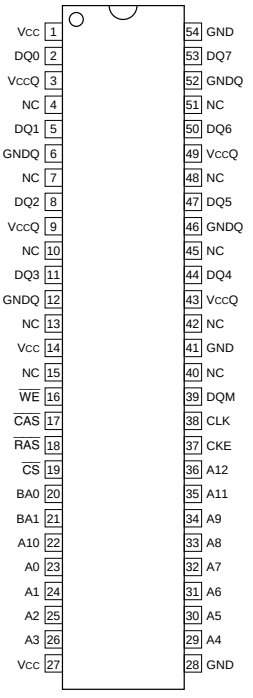

INPUTS

A0 - A12	:	ADDRESS
BA0, BA1	:	BANK SELECT ADDRESS
CAS	:	COLUMN ADDRESS STROBE
CKE	:	CLOCK ENABLE
CLK	:	CLOCK
CS	:	CHIP SELECT
RAS	:	ROW ADDRESS STROBE
WE	:	WRITE ENABLE

INPUTS/OUTPUTS

DQ0 - DQ7	:	DATA
DQM	:	DATA MASK

OTHER

NC	:	NO CONNECTION

EDS2516APTA-75 (ELPIDA)

256M (1677721 × 16) -BIT 4BANKS SDRAM
—TOP VIEW—

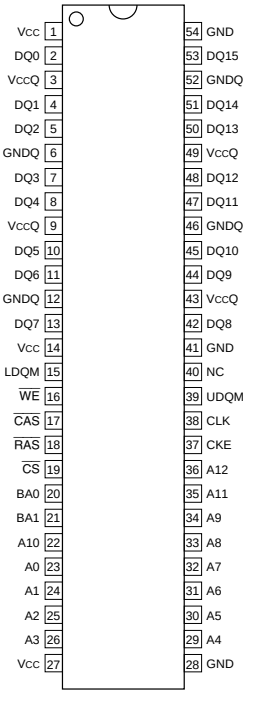

INPUTS

A0 - A12	:	ADDRESS
BA0, BA1	:	BANK SELECT ADDRESS
CAS	:	COLUMN ADDRESS STROBE
CKE	:	CLOCK ENABLE
CLK	:	CLOCK
CS	:	CHIP SELECT
LDQM	:	LOWER DQ MASK ENABLE
RAS	:	ROW ADDRESS STROBE
UDQM	:	UPPER DQ MASK ENABLE
WE	:	WRITE ENABLE

INPUTS/OUTPUTS

DQ0 - DQ15	:	DATA

OTHER

NC	:	NO CONNECTION

CXD9181R (SONY)

INK-JET HEAD CONTROLLER

—TOP VIEW—

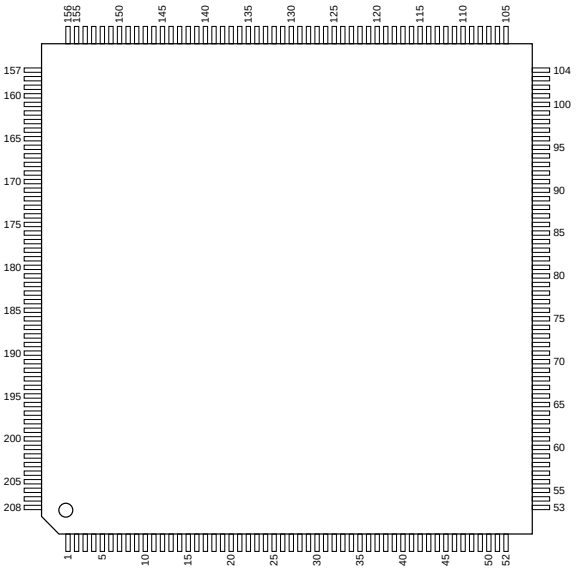

INPUTS

CLK35	: SYSTEM CLOCK
CLK66	: CPU BUS CLOCK
CPU ADD1 - CPU ADD9	: CPU ADDRESS BUS
DSP DATA0 - DSP DATA15	: DSP DATA BUS
$\overline{\text{CPU CS}}$	: CPU CHIP SELECT
$\overline{\text{CPU RE}}$	: CPU READ ENABLE
$\overline{\text{CPU RW}}$	: CPU READ/WRITE
$\overline{\text{CPU WE}}$	: CPU WRITE ENABLE
$\overline{\text{DSP REQ}}$	: DSP DATA REQUEST
HEAD PAGE	: HEAD PAGE
HEAD PRNTCLK, HEAD PRNTCLK I	: PRINT CLOCK
$\overline{\text{HEAD ACTIVE}}$, $\overline{\text{HEAD ACTIVE I}}$	: HEAD ACTIVE
MTST, SMODE, TMODE	: TEST PIN
RESET	: RESET
TEST	: TEST MODE SELECT
TEST MODE0 - TEST MODE3	: TEST MODE
WBTEST IN	: WB TEST

OUTPUTS

CPU DA DIR	: CPU DATA
DC SET CLK, DC SET LAT, DC SET OUT	: D/A SERIAL DATA
$\overline{\text{DSP ACK}}$	: DSP DATA ACKNOWLEDGE
H DA CLK	: HEAD DATA CLOCK
H DA0 - H DA31	: HEAD DATA
H EN ON0 - H EN ON15	: EN ON
H PH CLK	: HEAD PHASE CLOCK
H PH XRS	: HEAD PHASE RESET
H PRNT TOG	: PRINT CLOCK TOGGLE
H XEN	: HEAD ENABLE
$\overline{\text{HEAD ACTIVE O}}$	: HEAD ACTIVE
HEAD PRNTCLK O	: PRINT CLOCK
TEST OUT0 - TEST OUT31	: TEST

INPUTS/OUTPUTS

CPU DA0 - CPU DA15	: CPU DATA BUS

PIN NO.	I/O	SIGNAL	PIN NO.	I/O	SIGNAL	PIN NO.	I/O	SIGNAL	PIN NO.	I/O	SIGNAL
1	I	RESET	53	O	TEST OUT0	105	O	TEST OUT9	157	O	TEST OUT13
2	—	GND	54	O	TEST OUT1	106	O	TEST OUT10	158	O	TEST OUT14
3	I	WBTEST IN	55	O	TEST OUT2	107	O	TEST OUT11	159	O	TEST OUT15
4	—	Vcc	56	O	TEST OUT3	108	O	TEST OUT12	160	O	TEST OUT16
5	—	GND	57	O	TEST OUT4	109	—	Vcc	161	O	TEST OUT17
6	O	H DA0	58	—	GND	110	—	GND	162	O	TEST OUT18
7	O	H DA1	59	I	CLK66	111	O	DC SET OUT	163	O	TEST OUT19
8	O	H DA2	60	—	GND	112	O	DC SET CLK	164	—	GND
9	O	H DA3	61	—	Vcc	113	O	DC SET LAT	165	—	Vcc
10	—	Vcc	62	I/O	CPU DA0	114	—	Vcc	166	O	H EN ON0
11	O	H DA4	63	I/O	CPU DA1	115	I	DSP DATA0	167	O	H EN ON1
12	O	H DA5	64	I/O	CPU DA2	116	I	DSP DATA1	168	O	H EN ON2
13	O	H DA6	65	I/O	CPU DA3	117	I	DSP DATA2	169	O	H EN ON3
14	O	H DA7	66	I/O	CPU DA4	118	I	DSP DATA3	170	O	H EN ON4
15	—	GND	67	I/O	CPU DA5	119	—	GND	171	O	H EN ON5
16	O	H DA8	68	I/O	CPU DA6	120	I	DSP DATA4	172	O	H EN ON6
17	O	H DA9	69	I/O	CPU DA7	121	I	DSP DATA5	173	O	H EN ON7
18	O	H DA10	70	—	GND	122	I	DSP DATA6	174	—	GND
19	O	H DA11	71	—	Vcc	123	I	DSP DATA7	175	—	GND
20	O	H DA12	72	I/O	CPU DA8	124	—	GND	176	—	Vcc
21	O	H DA13	73	I/O	CPU DA9	125	—	Vcc	177	O	H EN ON8
22	O	H DA14	74	I/O	CPU DA10	126	I	DSP DATA8	178	O	H EN ON9
23	O	H DA15	75	I/O	CPU DA11	127	I	DSP DATA9	179	O	H EN ON10
24	—	Vcc	76	I/O	CPU DA12	128	I	DSP DATA10	180	O	H EN ON11
25	—	GND	77	I/O	CPU DA13	129	I	DSP DATA11	181	O	H EN ON12
26	O	H DA16	78	I/O	CPU DA14	130	I	DSP DATA12	182	O	H EN ON13
27	O	H DA17	79	I/O	CPU DA15	131	—	Vcc	183	O	H EN ON14
28	O	H DA18	80	—	GND	132	—	GND	184	O	H EN ON15
29	O	H DA19	81	—	Vcc	133	I	DSP DATA13	185	—	GND
30	O	H DA20	82	I	CPU ADD1	134	I	DSP DATA14	186	—	Vcc
31	O	H DA21	83	I	CPU ADD2	135	I	DSP DATA15	187	O	H DA CLK
32	O	H DA22	84	I	CPU ADD3	136	—	GND	188	O	H PH XRS
33	O	H DA23	85	I	CPU ADD4	137	O	H PRNT TOG	189	O	H PH CLK
34	—	GND	86	I	CPU ADD5	138	I	$\overline{\text{DSP REQ}}$	190	O	H XEN
35	O	H DA24	87	I	CPU ADD6	139	O	$\overline{\text{DSP ACK}}$	191	—	GND
36	O	H DA25	88	I	CPU ADD7	140	I	TMODE	192	—	Vcc
37	O	H DA26	89	I	CPU ADD8	141	I	SMODE	193	O	TEST OUT20
38	—	GND	90	—	GND	142	—	GND	194	O	TEST OUT21
39	—	Vcc	91	—	Vcc	143	I	CLK35	195	O	TEST OUT22
40	O	H DA27	92	I	CPU ADD9	144	—	GND	196	O	TEST OUT23
41	O	H DA28	93	I	$\overline{\text{CPU RW}}$	145	I	TEST	197	O	TEST OUT24
42	O	H DA29	94	I	$\overline{\text{CPU WE}}$	146	I	MTST	198	O	TEST OUT25
43	—	Vcc	95	I	$\overline{\text{CPU RE}}$	147	—	Vcc	199	—	GND
44	O	H DA30	96	—	GND	148	I	$\overline{\text{HEAD ACTIVE}}$	200	—	GND
45	O	H DA31	97	—	Vcc	149	I	$\overline{\text{HEAD ACTIVE I}}$	201	—	Vcc
46	—	GND	98	I	$\overline{\text{CPU CS}}$	150	O	$\overline{\text{HEAD ACTIVE O}}$	202	O	TEST OUT26
47	I	TEST MODE0	99	O	CPU DA DIR	151	I	HEAD PRNTCLK	203	O	TEST OUT27
48	—	GND	100	O	TEST OUT5	152	I	HEAD PRNTCLK I	204	O	TEST OUT28
49	—	Vcc	101	O	TEST OUT6	153	O	HEAD PRNTCLK O	205	O	TEST OUT29
50	I	TEST MODE1	102	O	TEST OUT7	154	—	GND	206	O	TEST OUT30
51	I	TEST MODE2	103	O	TEST OUT8	155	—	Vcc	207	O	TEST OUT31
52	I	TEST MODE3	104	—	GND	156	I	HEAD PAGE	208	—	GND

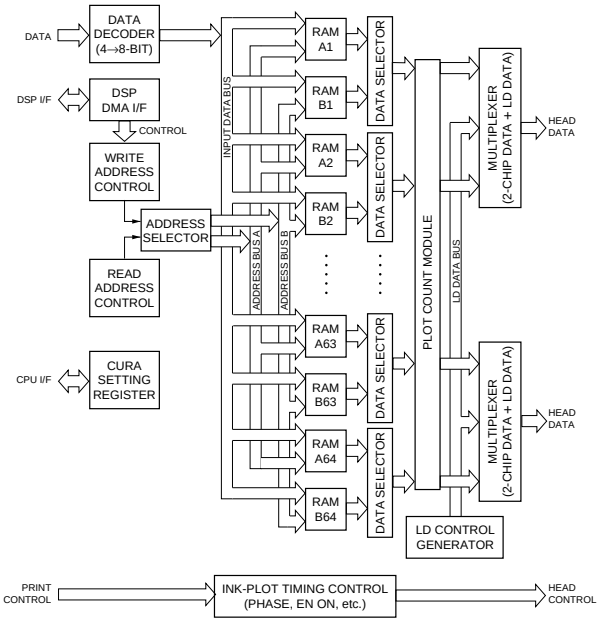

CXD9168GB (SONY)

BUS INTERFACE CONTROLLER

—BOTTOM VIEW—

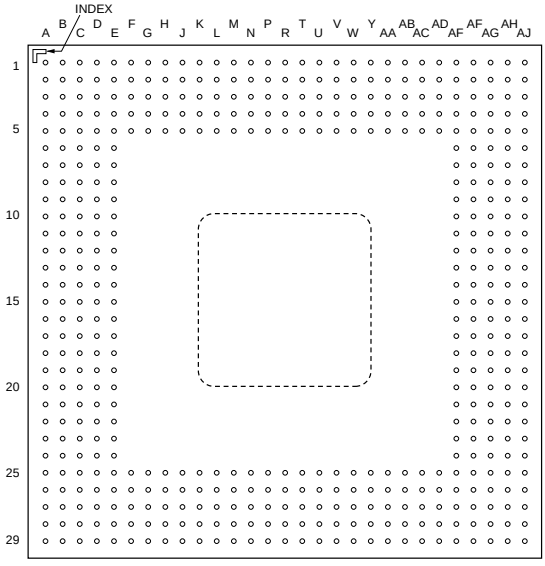

PIN NO.	OUTER NO.	I/O	SIGNAL	PIN NO.	OUTER NO.	I/O	SIGNAL	PIN NO.	OUTER NO.	I/O	SIGNAL
1	A1	I	SH CSSD0	46	AJ18	—	Vcc	91	A23	O	SH IRL3
2	B1	I	SH CSRG	47	AJ19	—	Vcc	92	A22	—	GND
3	C1	I	HRESET	48	AJ20	—	GND	93	A21	I	CLKMODE2
4	D1	—	GND	49	AJ21	—	Vcc	94	A20	I	SH RDWT
5	E1	I	TESTMODE	50	AJ22	—	Vcc	95	A19	—	Vcc
6	F1	I	TRST	51	AJ23	I/O	PCI AD4	96	A18	—	Vcc
7	G1	—	Vcc	52	AJ24	I/O	PCI AD2	97	A17	—	GND
8	H1	I/O	P1394 D2	53	AJ25	—	Vcc	98	A16	—	Vcc
9	J1	I/O	P1394 D4	54	AJ26	—	Vcc	99	A15	—	GND
10	K1	—	Vcc	55	AJ27	O	RAM ADR2	100	A14	I/O	SH DT30
11	L1	I/O	P1394 LREQ	56	AJ28	—	GND	101	A13	I/O	SH DT18
12	M1	—	Vcc	57	AJ29	O	RAM ADR7	102	A12	I/O	SH DT27
13	N1	—	GND	58	AH29	—	Vcc	103	A11	I/O	SH DT21
14	P1	I	MII RXD0	59	AG29	O	RAM ADR9	104	A10	I/O	SH DT24
15	R1	I	MII RXD3	60	AF29	O	RAM BKADR0	105	A9	I/O	SH DT8
16	T1	I	MII COL	61	AE29	I/O	RAM DT0	106	A8	I/O	SH DT5
17	U1	—	GND	62	AD29	I/O	RAM DT3	107	A7	I/O	SH DT11
18	V1	I	MII RXER	63	AC29	I/O	RAM DT6	108	A6	I/O	SH DT2
19	W1	I	MII TXCLK	64	AB29	I/O	RAM DT9	109	A5	—	Vcc
20	Y1	—	GND	65	AA29	I/O	RAM DT12	110	A4	I/O	SH DT0
21	AA1	O	MII TXD2	66	Y29	I/O	RAM DT15	111	A3	—	GND
22	AB1	O	MII TXEN	67	W29	O	RAM3 CS0	112	A2	I	HINTEX1
23	AC1	O	AWAKE	68	V29	O	RAM4 CS1	113	B2	I	SH CSSD3
24	AD1	—	Vcc	69	U29	O	RAM DQM2	114	C2	—	GND
25	AE1	I	PCI INTB	70	T29	I/O	RAM DT16	115	D2	—	Vcc
26	AF1	O	PCI RST	71	R29	I/O	RAM DT19	116	E2	—	RESERVED
27	AG1	I	PCI REQ0	72	P29	I/O	RAM DT20	117	F2	I	TDI
28	AH1	—	GND	73	N29	I/O	RAM DT23	118	G2	—	GND
29	AJ1	—	Vcc	74	M29	I/O	RAM DT26	119	H2	I/O	P1394 D1
30	AJ2	—	GND	75	L29	I/O	RAM DT29	120	J2	—	GND
31	AJ3	O	PCI CLK3	76	K29	O	RAM WE	121	K2	I/O	P1394 D7
32	AJ4	—	Vcc	77	J29	—	Vcc	122	L2	I/O	P1394 CTL0
33	AJ5	O	PCI GNT2	78	H29	I	SH3 RASU	123	M2	—	GND
34	AJ6	O	PCI GNT0	79	G29	I	SH3 ADR3	124	N2	I/O	P1394 SCLK
35	AJ7	—	Vcc	80	F29	I	SH3 ADR6	125	P2	I/O	P1394 DIRECT
36	AJ8	—	GND	81	E29	I	SH3 ADR9	126	R2	I	MII RXD2
37	AJ9	—	Vcc	82	D29	I	SH3 ADR11	127	T2	I	MII CRS
38	AJ10	—	Vcc	83	C29	I	SH3 ADR15	128	U2	I	MII RXCLK
39	AJ11	—	GND	84	B29	—	GND	129	V2	I	E LINK
40	AJ12	I/O	PCI AD19	85	A29	I	SH3 ADR20	130	W2	—	Vcc
41	AJ13	I/O	PCI AD17	86	A28	—	Vcc	131	Y2	O	MII TXD0
42	AJ14	—	Vcc	87	A27	I	SH3 ADR22	132	AA2	O	MII TXD3
43	AJ15	I/O	PCI DEVSEL	88	A26	—	Vcc	133	AB2	O	MII MDC
44	AJ16	I/O	PCI STOP	89	A25	I	SH3 BACK	134	AC2	O	MII TXER
45	AJ17	I/O	PCI PAR	90	A24	O	SH3 BREQ	135	AD2	—	GND

PIN NO.	OUTER NO.	I/O	SIGNAL	PIN NO.	OUTER NO.	I/O	SIGNAL	PIN NO.	OUTER NO.	I/O	SIGNAL
136	AE2	I	PCI INTA	181	M28	I/O	RAM DT27	226	M3	I/O	P1394 LPS
137	AF2	I	PCI REQ3	182	L28	I/O	RAM DT30	227	N3	—	Vcc
138	AG2	I	PCI SERR	183	K28	O	RAM CAS	228	P3	I/O	P1394 LINKON
139	AH2	—	Vcc	184	J28	I	SH3 CASU	229	R3	I	MII RXD1
140	AH3	—	Vcc	185	H28	I	SH3 RASL	230	T3	I	MII RXDV
141	AH4	—	GND	186	G28	I	SH3 ADR4	231	U3	—	Vcc
142	AH5	O	PCI GNT3	187	F28	I	SH3 ADR7	232	V3	—	Vcc
143	AH6	—	Vcc	188	E28	I	SH3 ADR10	233	W3	—	GND
144	AH7	I/O	PCI AD29	189	D28	I	SH3 ADR12	234	Y3	O	MII TXD1
145	AH8	I/O	PCI AD27	190	C28	I	SH3 ADR16	235	AA3	—	Vcc
146	AH9	I/O	PCI AD25	191	B28	I	SH3 ADR17	236	AB3	I/O	MII MDIO
147	AH10	I/O	PCI CBE3	192	B27	I	SH3 ADR21	237	AC3	—	Vcc
148	AH11	I/O	PCI AD22	193	B26	I	SH3 ADR25	238	AD3	I	PCI INTD
149	AH12	I/O	PCI AD20	194	B25	I	SH3 RD	239	AE3	I	PCI REQ2
150	AH13	—	Vcc	195	B24	O	SH3 WAIT	240	AF3	I	PCI REQ1
151	AH14	I/O	PCI FRAME	196	B23	O	SH IRL2	241	AG3	—	GND
152	AH15	I/O	PCI TRDY	197	B22	O	SH NMI	242	AG4	O	PCI CLK2
153	AH16	—	GND	198	B21	I	CLKMODE1	243	AG5	O	PCI CLK0
154	AH17	I/O	PCI CBE1	199	B20	I	SH BS	244	AG6	—	GND
155	AH18	I/O	PCI AD14	200	B19	—	GND	245	AG7	I/O	PCI AD30
156	AH19	I/O	PCI AD12	201	B18	—	Vcc	246	AG8	I/O	PCI AD28
157	AH20	I/O	PCI AD10	202	B17	—	Vcc	247	AG9	I/O	PCI AD26
158	AH21	I/O	PCI AD8	203	B16	—	Vcc	248	AG10	I/O	PCI AD24
159	AH22	I/O	PCI AD7	204	B15	I/O	SH DT16	249	AG11	I/O	PCI AD23
160	AH23	—	GND	205	B14	I/O	SH DT17	250	AG12	I/O	PCI AD21
161	AH24	I/O	PCI AD1	206	B13	I/O	SH DT28	251	AG13	—	GND
162	AH25	—	Vcc	207	B12	I/O	SH DT20	252	AG14	I/O	PCI CBE2
163	AH26	—	GND	208	B11	I/O	SH DT25	253	AG15	—	GND
164	AH27	O	RAM ADR3	209	B10	I/O	SH DT23	254	AG16	—	Vcc
165	AH28	O	RAM ADR4	210	B9	I/O	SH DT6	255	AG17	I/O	PCI AD15
166	AG28	O	RAM ADR8	211	B8	I/O	SH DT10	256	AG18	I/O	PCI AD13
167	AF28	O	RAM ADR12	212	B7	I/O	SH DT3	257	AG19	I/O	PCI AD11
168	AE28	O	RAM BKADR1	213	B6	I/O	SH DT13	258	AG20	I/O	PCI AD9
169	AD28	I/O	RAM DT2	214	B5	I/O	SH DT14	259	AG21	I/O	PCI CBE0
170	AC28	I/O	RAM DT5	215	B4	I/O	SH DT15	260	AG22	I/O	PCI AD6
171	AB28	I/O	RAM DT8	216	B3	I	HINTEX0	261	AG23	—	Vcc
172	AA28	I/O	RAM DT11	217	C3	I	SH CSSD1	262	AG24	I/O	PCI AD0
173	Y28	I/O	RAM DT14	218	D3	—	Vcc	263	AG25	O	RAM ADR0
174	W28	O	RAM DQM1	219	E3	I	SH CLKEX	264	AG26	O	RAM ADR1
175	V28	O	RAM4 CS0	220	F3	O	TDO	265	AG27	O	RAM ADR6
176	U28	O	RAM4 CS3	221	G3	I	TCK	266	AF27	O	RAM ADR10
177	T28	—	GND	222	H3	I/O	P1394 D0	267	AE27	O	RAM ADR11
178	R28	I/O	RAM DT18	223	J3	—	Vcc	268	AD27	I/O	RAM DT1
179	P28	I/O	RAM DT21	224	K3	I/O	P1394 D6	269	AC27	I/O	RAM DT4
180	N28	I/O	RAM DT24	225	L3	I/O	P1394 CTL1	270	AB27	I/O	RAM DT7

PIN NO.	OUTER NO.	I/O	SIGNAL	PIN NO.	OUTER NO.	I/O	SIGNAL	PIN NO.	OUTER NO.	I/O	SIGNAL
271	AA27	I/O	RAM DT10	316	G4	I	TMS	361	AB26	—	Vcc
272	Y27	I/O	RAM DT13	317	H4	—	GND	362	AA26	—	GND
273	W27	O	RAM DQM0	318	J4	I/O	P1394 D3	363	Y26	—	Vcc
274	V27	O	RAM3 CS1	319	K4	I/O	P1394 D5	364	W26	—	GND
275	U27	O	RAM4 CS2	320	L4	—	GND	365	V26	—	Vcc
276	T27	—	Vcc	321	M4	—	Vcc	366	U26	—	GND
277	R27	I/O	RAM DT17	322	N4	—	GND	367	T26	O	RAM DQM3
278	P27	I/O	RAM DT22	323	P4	—	Vcc	368	R26	—	GND
279	N27	I/O	RAM DT25	324	R4	—	GND	369	P26	—	Vcc
280	M27	I/O	RAM DT28	325	T4	—	Vcc	370	N26	—	GND
281	L27	I/O	RAM DT31	326	U4	—	GND	371	M26	—	GND
282	K27	O	RAM RAS	327	V4	—	GND	372	L26	—	Vcc
283	J27	I	SH3 CASL	328	W4	—	Vcc	373	K26	—	GND
284	H27	I	SH3 ADR2	329	Y4	—	GND	374	J26	—	GND
285	G27	I	SH3 ADR5	330	AA4	—	GND	375	H26	—	Vcc
286	F27	I	SH3 ADR8	331	AB4	—	Vcc	376	G26	—	GND
287	E27	I	SH3 ADR13	332	AC4	—	GND	377	F26	—	GND
288	D27	I	SH3 ADR14	333	AD4	I	PCI INTC	378	E26	—	Vcc
289	C27	I	SH3 ADR19	334	AE4	—	Vcc	379	D26	I	SH3 ADR18
290	C26	I	SH3 ADR23	335	AF4	I	PCI CLKEX	380	D25	—	GND
291	C25	I	SH3 ADR24	336	AF5	O	PCI CLK1	381	D24	—	Vcc
292	C24	—	GND	337	AF6	O	PCI GNT1	382	D23	O	SH IRL0
293	C23	O	SH IRL1	338	AF7	I/O	PCI AD31	383	D22	—	GND
294	C22	—	Vcc	339	AF8	—	GND	384	D21	—	Vcc
295	C21	I	CLKMODE0	340	AF9	—	Vcc	385	D20	I	SHMODE
296	C20	I	SH FRAME	341	AF10	—	GND	386	D19	I	SH MPXSZ0
297	C19	—	GND	342	AF11	—	GND	387	D18	O	SH CLK0
298	C18	—	GND	343	AF12	—	Vcc	388	D17	I	SH MPXSZ1
299	C17	I	SH MPXSZ2	344	AF13	I/O	PCI AD18	389	D16	O	SH CLK1
300	C16	—	GND	345	AF14	I/O	PCI AD16	390	D15	I/O	SH DT31
301	C15	O	SH4 RDY	346	AF15	I/O	PCI IRDY	391	D14	—	Vcc
302	C14	I/O	SH DT29	347	AF16	I/O	PCI PERR	392	D13	—	GND
303	C13	I/O	SH DT19	348	AF17	—	GND	393	D12	—	Vcc
304	C12	I/O	SH DT26	349	AF18	—	GND	394	D11	—	GND
305	C11	I/O	SH DT22	350	AF19	—	Vcc	395	D10	—	Vcc
306	C10	I/O	SH DT7	351	AF20	—	GND	396	D9	—	GND
307	C9	I/O	SH DT9	352	AF21	—	GND	397	D8	—	Vcc
308	C8	I/O	SH DT4	353	AF22	I/O	PCI AD5	398	D7	—	GND
309	C7	I/O	SH DT12	354	AF23	I/O	PCI AD3	399	D6	—	GND
310	C6	I/O	SH DT1	355	AF24	—	GND	400	D5	—	Vcc
311	C5	—	GND	356	AF25	—	Vcc				
312	C4	—	Vcc	357	AF26	O	RAM ADR5				
313	D4	I	SH CSSD2	358	AE26	—	GND				
314	E4	—	GND	359	AD26	—	Vcc				
315	F4	—	Vcc	360	AC26	—	GND				

INPUTS

CLKMODE0 - CLKMODE2	:	SH BUS CLOCK SELECT
E LINK	:	LINK DETECT
HINTEX0, HINTEX1	:	EXTERNAL INTERRUPT
HRESET	:	HARDWARE RESET
MII COL	:	COLLISION DETECT
MII CRS	:	CARRIER SENS
MII RXCLK	:	RECEIVE CLOCK
MII RXD0 - MII RXD3	:	RECEIVE DATA
MII RXDV	:	RECEIVE DATA ENABLE
MII RXER	:	RECEIVE ERROR
MII TXCLK	:	TRANSMIT CLOCK
PCI CLKEX	:	PCI CLOCK
PCI INTA, PCI INTB, PCI INTC, PCI INTD	:	PCI BUS INTERRUPT
PCI REQ0 - PCI REQ3	:	PCI BUS REQUEST
PCI SERR	:	PCI BUS PARITY ERROR
SH BS	:	BUS START
SH CLKEX	:	SH BUS CLOCK
SH CSRG	:	CHIP SELECT FOR INTERNAL RESISTER
SH CSSD0 - SH CSSD3	:	CHIP SELECT FOR SDRAM
SH FRAME	:	CYCLE FRAME
SH MPXSZ0 - SH MPXSZ2	:	PASS ACCESS SIZE SELECT
SH RDWT	:	BUS READ/WRITE
SH3 ADR2 - SH3 ADR25	:	SH-3 ADDRESS BUS
SH3 BACK	:	SH-3 BUS ACKNOWLEDGE
SH3 CASL, SH3 CASU	:	SDRAM COLUMN ADDRESS STROBE
SH3 RASL, SH3 RASU	:	SDRAM ROW ADDRESS STROBE
SH3 RD	:	SH-3 BUS READ STROBE
SHMODE	:	SH MODE SELECT
TCK, TDI, TESTMODE, TMS, TRST	:	TEST

OUTPUTS

AWAKE	:	MAGIC PACKET DETECT
MII MDC	:	MANAGEMENT DATA CLOCK
MII TXD0 - MII TXD3	:	TRANSMIT DATA
MII TXEN	:	TRANSMIT DATA ENABLE
MII TXER	:	TRANSMIT ERROR
PCI CLK0 - PCI CLK3	:	PCI BUS CLOCK
PCI GNT0 - PCI GNT3	:	PCI BUS GRANT
PCI RST	:	PCI BUS RESET
RAM ADR0 - RAM ADR12	:	SDRAM ADDRESS
RAM BKADR0, RAM BKADR1	:	SDRAM BANK ADDRESS
RAM CAS	:	SDRAM COLUMN ADDRESS STROBE
RAM DQM0 - RAM DQM3	:	SDRAM BITE ENABLE
RAM RAS	:	SDRAM ROW ADDRESS STROBE
RAM WE	:	SDRAM WRITE ENABLE
RAM3 CS0, RAM3 CS1	:	SDRAM CHIP SELECT FOR SH-3
RAM4 CS0 - RAM4 CS3	:	SDRAM CHIP SELECT FOR SH-4
SH CLK0, SH CLK1	:	SH CLOCK
SH IRL0 - SH IRL3	:	SH BUS INTERRUPT
SH NMI	:	SH NOM-MASKABLE INTERRUPT
SH3 BREQ	:	SH-3 BUS REQUEST
SH3 WAIT	:	SH-3 BUS WAIT
SH4 RDY	:	SH-4 READY
TDO	:	TEST

INPUTS/OUTPUTS

MII MDIO	:	MANAGEMENT DATA
P1394 CTL0, P1394 CTL1	:	CONTROL
P1394 D0 - P1394 D7	:	DATA
P1394 DIRECT	:	LINK-PHY DIRECT CONNECTION
P1394 LINKON	:	LINK POWER ON
P1394 LPS	:	LINK POWER SUPPLY
P1394 LREQ	:	LINK REQUEST
P1394 SCLK	:	49.152 MHz CLOCK
PCI AD0 - PCI AD31	:	PCI DATA BUS
PCI CBE0 - PCI CBE3	:	PCI BUS COMMAND AND BITE ENABLE
PCI DEVSEL	:	PCI BUS DEVICE SELECT
PCI FRAME	:	PCI BUS FRAME
PCI IRDY	:	PCI BUS INITIATE READY
PCI PAR	:	PCI BUS PARITY
PCI PERR	:	PCI BUS PARITY ERROR
PCI STOP	:	PCI BUS STOP
PCI TRDY	:	PCI BUS TRANSMIT READY
RAM DT0 - RAM DT31	:	SDRAM DATA BUS
SH DT0 - SH DT31	:	DATA BUS

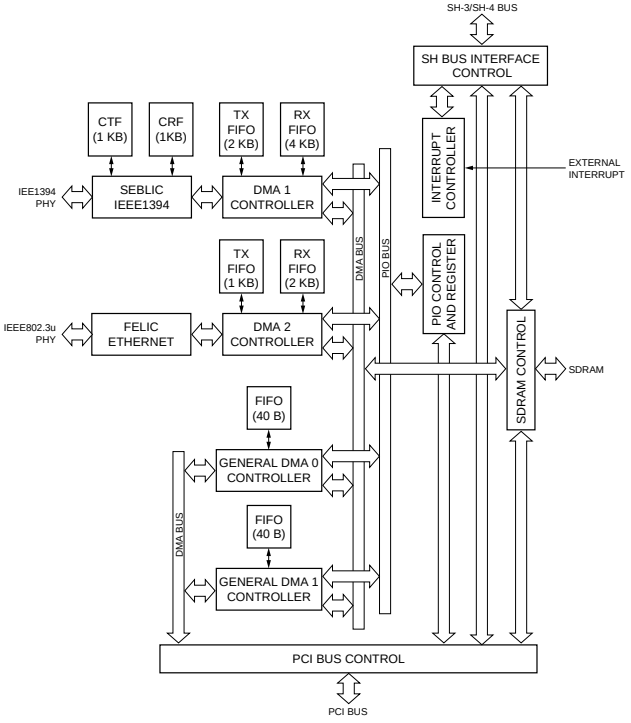

LC65F1306A-4M30-E (SANYO)
LC65F1306AU-MF-TL-E (SANYO)

4-BIT MICROCOMPUTER
—TOP VIEW—

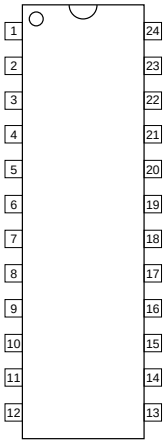

INPUTS

AD0 - AD7	:	A/D CONVERTER ANALOG INPUT
$\overline{\text{INT}}$	:	INTERRUPT REQUEST
OSC1	:	OSCILLATOR
$\overline{\text{RES}}$	:	RESET
SI	:	SERIAL INPUT
TEST	:	TEST
WDR	:	WATCHDOG RESET

OUTPUTS

OSC2	:	OSCILLATOR
SO	:	SERIAL OUTPUT
SQR	:	RECTANGULAR WAVE

INPUTS/OUTPUTS

PA0 - PA3	:	PORT A
PC0 - PC3	:	PORT C
PD0 - PD3	:	PORT D
PE0, PE1	:	PORT E
PF0 - PF3	:	PORT F
$\overline{\text{SCK}}$	:	SERIAL CLOCK

PIN NO.	I/O	SIGNAL	PIN NO.	I/O	SIGNAL	PIN NO.	I/O	SIGNAL	PIN NO.	I/O	SIGNAL
1	I	$\overline{\text{RES}}$	7	I/O	PF3/$\overline{\text{INT}}$/AD7	13	I/O	PC0	19	I/O	PD2
2	I/O	PE0/SQR	8	I/O	PA0/AD0	14	I/O	PC1	20	I/O	PD3
3	I/O	PE1/WDR	9	I/O	PA1/AD1	15	I/O	PC2	21	—	GND
4	I/O	PF0/SI/AD4	10	I/O	PA2/AD2	16	I/O	PC3	22	I	TEST
5	I/O	PF1/SO/AD5	11	I/O	PA3/AD3	17	I/O	PD0	23	O	OSC2
6	I/O	PF2/$\overline{\text{SCK}}$/AD6	12	—	Vcc	18	I/O	PD1	24	I	OSC1

HD6417750SBP200 (HITACHI)

32-BIT RISC MICROPROCESSOR
—TOP VIEW—

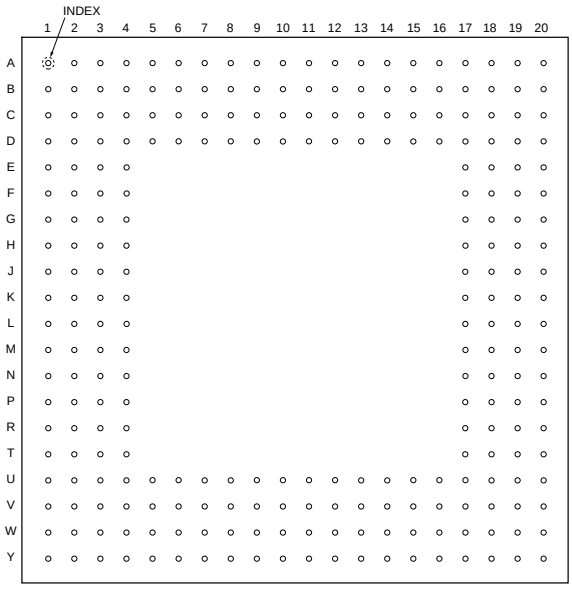

PIN NO.	I/O	SIGNAL	PIN NO.	I/O	SIGNAL	PIN NO.	I/O	SIGNAL	PIN NO.	I/O	SIGNAL
L1	I/O	D41	R1	I/O	D13	U17	I	DREQ0	W9	O	A10
L2	I/O	D38	R2	I/O	D2	U18	I	DREQ1	W10	O	A8
L3	—	Vcc	R3	—	Vcc	U19	I/O	D20	W11	O	CKIO2
L4	—	GND	R4	—	GND	U20	I/O	D27	W12	O	A5
L17	—	GND	R17	—	GND	V1	I/O	D10	W13	O	A3
L18	—	Vcc	R18	—	Vcc	V2	I/O	D5	W14	O	CS3
L19	I/O	D54	R19	I/O	D18	V3	I	BREQ/BSACK	W15	O	RAS
L20	I/O	D57	R20	I/O	D29	V4	—	NC	W16	O	RD/WR
M1	I/O	D40	T1	I/O	D12	V5	—	Vcc	W17	O	WE3/CAS3/DQM3/ICIOWR
M2	I/O	D39	T2	I/O	D3	V6	—	Vcc	W18	O	WE7/CAS7/DQM7/REG
M3	—	Vcc	T3	—	Vcc	V7	—	Vcc	W19	I/O	D24
M4	—	GND	T4	—	GND	V8	—	Vcc	W20	I/O	D25
M17	—	GND	T17	—	GND	V9	—	Vcc	Y1	I/O	D6
M18	—	Vcc	T18	—	Vcc	V10	—	Vcc	Y2	I/O	D7
M19	I/O	D55	T19	I/O	D19	V11	—	Vcc	Y3	O	WE5/CAS5/DQM5
M20	I/O	D56	T20	I/O	D28	V12	O	DRAK1	Y4	O	WE1/CAS1/DQM1
N1	I/O	D15	U1	I/O	D11	V13	—	Vcc	Y5	O	A17
N2	I/O	D0	U2	I/O	D4	V14	—	Vcc	Y6	O	A15
N3	—	NC	U3	O	BACK/BSREQ	V15	—	Vcc	Y7	O	A13
N4	—	NC	U4	—	NC	V16	—	Vcc	Y8	O	A11
N17	—	GND	U5	—	GND	V17	I	RXD	Y9	O	A9
N18	—	Vcc	U6	—	GND	V18	—	NC	Y10	O	A7
N19	I/O	D16	U7	—	GND	V19	I/O	D21	Y11	O	CKIO
N20	I/O	D31	U8	—	GND	V20	I/O	D26	Y12	O	A6
P1	I/O	D14	U9	—	GND	W1	I/O	D9	Y13	O	A4
P2	I/O	D1	U10	—	GND	W2	I/O	D8	Y14	O	A2
P3	—	Vcc	U11	—	GND	W3	O	CKE	Y15	O	CS2
P4	—	GND	U12	—	GND	W4	O	WE4/CAS4/DQM4	Y16	O	RD/CASS/FRAME
P17	—	GND	U13	O	DRAK0	W5	O	WE0/CAS0/DQM0	Y17	O	WE2/CAS2/DQM2/ICIORD
P18	—	Vcc	U14	—	GND	W6	O	A16	Y18	O	WE6/CAS6/DQM6
P19	I/O	D17	U15	—	GND	W7	O	A14	Y19	I/O	D23
P20	I/O	D30	U16	—	GND	W8	O	A12	Y20	I/O	D22

PIN NO.	I/O	SIGNAL	PIN NO.	I/O	SIGNAL	PIN NO.	I/O	SIGNAL	PIN NO.	I/O	SIGNAL
A1	I	EXTAL	B13	O	A21	D5	—	GND	G1	I/O	D34
A2	O	XTAL	B14	O	A19	D6	—	GND	G2	I/O	D45
A3	—	Vcc	B15	I/O	MD7/TXD	D7	—	GND	G3	—	Vcc
A4	—	Vcc	B16	I/O	MD8/RTS2	D8	O	A1	G4	—	GND
A5	I	TCK	B17	—	Vcc	D9	—	GND	G17	—	GND
A6	O	TDO	B18	—	GND	D10	—	GND	G18	—	Vcc
A7	I	MD6/IOIS16	B19	O	XTAL2	D11	—	GND	G19	I/O	D61
A8	O	STATUS0	B20	I	IRL2	D12	—	GND	G20	I/O	D50
A9	O	DACK0	C1	O	CS1	D13	—	GND	H1	I/O	D35
A10	I/O	MD4/CE2B	C2	O	CS0	D14	—	GND	H2	I/O	D44
A11	I/O	MD3/CE2A	C3	I	CKIO2ENB	D15	—	GND	H3	—	Vcc
A12	O	A24	C4	I	TRST	D16	—	NC	H4	—	GND
A13	O	A22	C5	—	NC	D17	I	CA*	H17	—	NC
A14	O	A20	C6	—	NC	D18	I	MD2/RXD2	H18	—	NC
A15	O	A18	C7	—	Vcc	D19	I/O	MD1/TXD2	H19	I/O	D60
A16	I	SCK2/MRESET	C8	O	A0	D20	I/O	MD0/SCK	H20	I/O	D51
A17	I/O	TCLK	C9	—	Vcc	E1	I/O	D32	J1	I/O	D36
A18	—	Vcc	C10	—	Vcc	E2	I/O	D47	J2	I/O	D43
A19	I	EXTAL2	C11	—	Vcc	E3	O	RD2	J3	—	Vcc
A20	I	NMI	C12	—	Vcc	E4	—	GND	J4	—	GND
B1	I	RESET	C13	—	Vcc	E17	—	GND	J17	—	GND
B2	I	RDY	C14	—	Vcc	E18	O	RD/WR2	J18	—	Vcc
B3	—	GND	C15	—	Vcc	E19	I/O	D63	J19	I/O	D59
B4	—	Vcc	C16	I/O	CTS2	E20	I/O	D48	J20	I/O	D52
B5	I	TDI	C17	—	GND	F1	I/O	D33	K1	I/O	D37
B6	I	TMS	C18	I	IRL3	F2	I/O	D46	K2	I/O	D42
B7	I/O	ASEBRK/BRKACK	C19	I	IRL1	F3	—	Vcc	K3	—	Vcc
B8	O	STATUS1	C20	I	IRL0	F4	—	GND	K4	—	GND
B9	O	DACK1	D1	O	BS	F17	—	GND	K17	—	GND
B10	I/O	MD5/RAS2	D2	O	CS6	F18	—	Vcc	K18	—	Vcc
B11	O	A25	D3	O	CS5	F19	I/O	D62	K19	I/O	D58
B12	O	A23	D4	O	CS4	F20	I/O	D49	K20	I/O	D53

* : HD6417750BP200M IS RESERVED.

INPUTS

BREQ	: BUS REQUEST
BSACK	: BUS ACKNOWLEDGEMENT
CA	: CHIP ACTIVE/HARDWARE STANDBY REQUEST
CKIO2ENB	: CKIO2, RD2, RD/WR2 ENABLE
DREQ0, DREQ1	: REQUEST FROM DMAC0, DMAC1
EXTAL	: EXTERNAL INPUT CLOCK/CRYSTAL RESONATOR
EXTAL2	: CRYSTAL RESONATOR FOR RTC
IOIS16	: INPUT/OUTPUT 16-BIT COMMAND
IRL0 - IRL3	: INTERRUPT
MD1 - MD8	: MODE CONTROL
MRESET	: MANUAL PROGRAM RESET
NMI	: NONMASKABLE INTERRUPT
RDY	: BUS READY
RESERVED	: RESERVED
RESET	: RESET
RXD, RXD2	: RECEIVE DATA INPUT
SCK2	: SCIF CLOCK
TCK	: CLOCK
TDI	: DATA INPUT
TMS	: MODE
TRST	: RESET

OUTPUTS

A0 - A25	: ADDRESS
$\overline{\text{BACK}}$	: BUS ACKNOWLEDGE
$\overline{\text{BS}}$	: BURST START
$\overline{\text{BSREQ}}$	: BUS REQUEST
$\overline{\text{CAS0}}$ - $\overline{\text{CAS7}}$	: COLUMN ADDRESS STROBE
$\overline{\text{CASS}}$	: CAS SELECTION
$\overline{\text{CE2A}}$, $\overline{\text{CE2B}}$	: PCMCIA-CHIP ENABLE
CKE	: CLOCK OUTPUT ENABLE
CKIO, CKIO2	: CLOCK
$\overline{\text{CS0}}$ - $\overline{\text{CS6}}$	: CHIP SELECT
DACK0, DACK1	: DMA TRANSFER STROBE
DQM0 - DQM7	: DATA SELECT SIGNAL
DRAK0, DRAK1	: DMA REQUEST ACKNOWLEDGE
$\overline{\text{FRAME}}$	: FRAME
$\overline{\text{ICIORD}}$	: PCMCIA I/O-READ
$\overline{\text{ICIOWR}}$	: PCMCIA I/O-WRITE
$\overline{\text{RAS}}$, $\overline{\text{RAS2}}$	: ROW ADDRESS STROBE
$\overline{\text{RD}}$, $\overline{\text{RD}}$, $\overline{\text{RD2}}$	: READ
$\overline{\text{REG}}$	: DATA SELECT SIGNAL
STATUS0, STATUS1	: STATUS
TDO	: DATA
TXD, TXD2	: TRANSMISSION DATA
$\overline{\text{WE0}}$ - $\overline{\text{WE7}}$	: WRITE ENABLE
$\overline{\text{WR}}$, $\overline{\text{WR2}}$	: WRITE
XTAL, XTAL2	: CRYSTAL RESONATOR

INPUTS/OUTPUTS

$\overline{\text{ASEBRK}}$	: PIN BREAK
$\overline{\text{BRKACK}}$	: BREAK ACKNOWLEDGE
$\overline{\text{CTS2}}$, $\overline{\text{RTS2}}$	: SCIF DATA CONTROL
D0 - D63	: DATA OR I/O PORT (D32 TO D47)
SCK	: SCI CLOCK
TCLK	: TIMER CLOCK

OTHER

NC	: NO CONNECTION

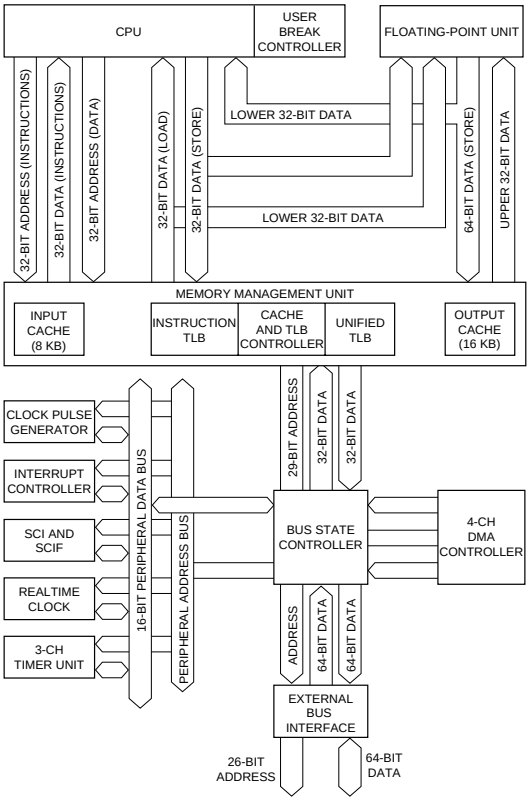

SCI : SERIAL COMMUNICATION INTERFACE
SCIF : SERIAL COMMUNICATION INTERFACE WITH FIFO
TLB : TRANSLATION LOOKASIDE BUFFER

LT1764EQ-E2 (LINEAR TECH)
LT1963EQ-E2 (LINEAR TECH)

POSITIVE VOLTAGE REGULATOR

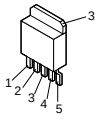

1 : $\overline{\text{SHDN}}$
2 : IN
3 : GND
4 : OUT
5 : SENSE (FOR LT ****-x.x)
ADJ (FOR LT****)

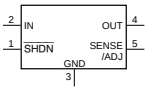

LTC1624IS8 (LINEAR TECH)
LTC1624IS8-E2

SWITCHING REGULATOR CONTROLLER
—TOP VIEW—

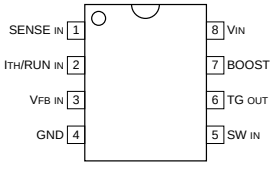

INPUTS

BOOST	: BOOST
ITH/RUN	: THRESHOLD INPUT/RUN CONTROL
SENSE	: SENSE
SW	: SWITCH
VFB	: FEEDBACK VOLTAGE

OUTPUT

TG	: TOP SIDE N-CH MOSFET GATE DRIVE

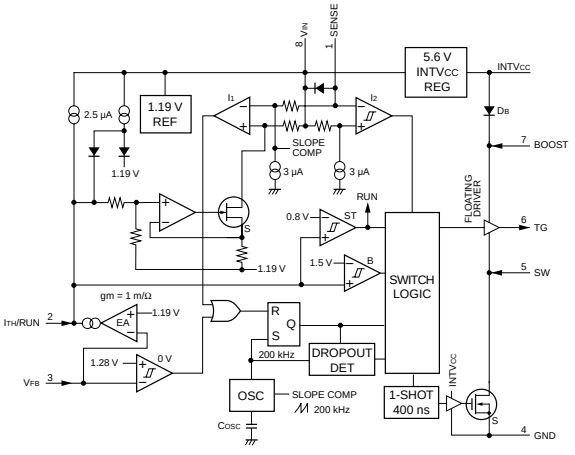

M25P10-AVMN6T (ST)

1M-BIT SERIAL EEPROM
—TOP VIEW—

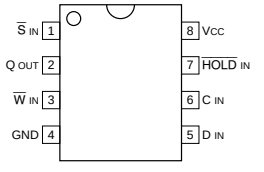

INPUTS

C	: SERIAL CLOCK
D	: SERIAL DATA
$\overline{\text{HOLD}}$	: HOLD
$\overline{\text{S}}$	: CHIP SELECT
$\overline{\text{W}}$	: WRITE PROTECT

OUTPUT

Q	: SERIAL DATA

M37905F8CFP (MITSUBISHI)

16-BIT MICROCOMPUTER

—TOP VIEW—

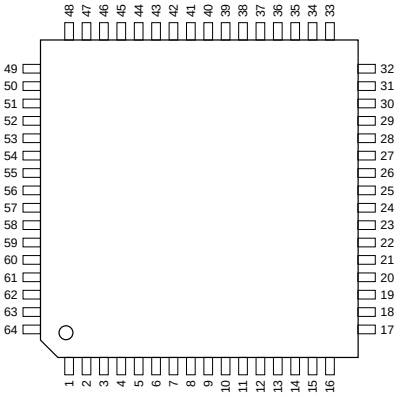

PIN NO.	I/O	SIGNAL	PIN NO.	I/O	SIGNAL	PIN NO.	I/O	SIGNAL	PIN NO.	I/O	SIGNAL
1	I/O	P73/AN3	17	I	MD0	33	I/O	P41/TA5IN/RTP21	49	I/O	P12/RXD0
2	I/O	P72/AN2	18	I	RESET	34	I/O	P40/TA5OUT/RTP20	50	I/O	P11/CTS0 1/CLK0
3	I/O	P71/AN1	19	I	XIN	35	I	MD1	51	I/O	P10/CTS0 2/RTS0
4	I/O	P70/AN0	20	O	XOUT	36	I/O	P27	52	—	VCC
5	I/O	P67/TA3IN/RTP13	21	I/O	VCONT	37	I/O	P26	53	—	VCC
6	I/O	P66/TA3OUT/RTP12	22	—	GND	38	I/O	P25	54	—	VREF
7	I/O	P65/TA2IN/U/RTP11	23	I/O	P53/INT3/RTPTRG0	39	I/O	P24	55	—	GND
8	I/O	P64/TA2OUT/V/RTP10	24	I/O	P52/INT2/RTPTRG1	40	I/O	P23/TA9IN	56	—	GND
9	I/O	P63/TA1IN/W/RTP03	25	I/O	P51/INT1	41	I/O	P22/TA9OUT	57	I/O	P83/AN11/TXD2
10	I/O	P62/TA1OUT/U/RTP02	26	I	P4OUTCUT/INT0	42	I/O	P21/TA4IN	58	I/O	P82/AN10/RXD2
11	I/O	P61/TA0IN/V/RTP01	27	I/O	P47/TA8IN/RTP33	43	I/O	P20/TA4OUT	59	I/O	P81/AN9/CTS2 1/CLK2
12	I/O	P60/TA0OUT/W/RTP00	28	I/O	P46/TA8OUT/RTP32	44	I/O	P17/TXD1	60	I/O	P80/AN8/CTS2 2/RTS2/DA1
13	I/O	P57/INT7/TB2IN/IDU	29	I/O	P45/TA7IN/RTP31	45	I/O	P16/RXD1	61	I/O	P77/AN7/DA0
14	I/O	P56/INT6/TB1IN/IDV	30	I/O	P44/TA7OUT/RTP30	46	I/O	P15/CTS1 1/CLK1	62	I/O	P76/AN6
15	I/O	P55/INT5/TB0IN/IDW	31	I/O	P43/TA6IN/RTP23	47	I/O	P14/CTS1 2/RTS1	63	I/O	P75/AN5
16	I	P6OUTCUT/INT4	32	I/O	P42/TA6OUT/RTP22	48	I/O	P13/TXD0	64	I/O	P74/AN4

INPUTS

AN0 - AN11 : ANALOG INPUTS TO A/D CONVERTER
TB0IN - TB2IN : TIMER B
CLK0 - CLK2 : CLOCK FOR SERIAL I/O
CTS0 1, CTS0 2, CTS1 1, CTS1 2, CTS2 1, CTS2 2 : CLEAR TO SEND
IDU, IDV, IDW : THREE-PHASE LOCATION IDENTIFICATION
INT0 - INT7 : INTERRRUPT
MD0, MD1 : MODE SELECT
P4OUTCUT : PORT 4 OUTPUTS CUTOFF
P6OUTCUT : PORT 6 OUTPUTS CUTOFF
RESET : RESET
RTPTRG0, RTPTRG1 : PULSE OUTPUT PORT TRIGGER
RTS0 - RTS2 : REQUEST TO SEND
TA0IN - TA9IN : TIMER A
XIN : CRYSTAL OSCILLATOR

OUTPUTS

DA0, DA1 : ANALOG OUTPUTS FROM D/A CONVERTER
RTP00 - RTP03 : PULSE OUTPUT PORT 0
RTP10 - RPT13 : PULSE OUTPUT PORT 1
RTP21 - RPT23 : PULSE OUTPUT PORT 2
RTP31 - RPT33 : PULSE OUTPUT PORT 3
RXD0 - RXD2 : RECEIVE DATA
TA0OUT - TA9OUT : TIMER A
TXD0 - TXD2 : TRANSMIT DATA
U, V, W, U, V, W : THREE-PHASE MOTOR CONTROL
XOUT : CRYSTAL OSCILLATOR

INPUTS/OUTPUTS

P10 - P17 : PORT 1
P20 - P27 : PORT 2
P40 - P47 : PORT 4
P51 - P53, P55 - P57 : PORT 5
P60 - P67 : PORT 6
P70 - P77 : PORT 7
P80 - P83 : PORT 8

OTHER

VCONT : FILTER CONNECTION
VREF : REFERENCE VOLTAGE

M62354GP-75ED (MITSUBISHI)
M62354GP75ED

8-BIT 6CHANNEL D/A CONVERTER

—TOP VIEW—

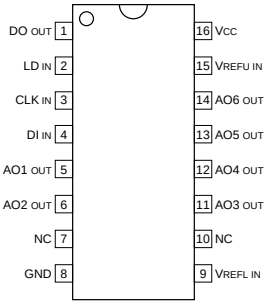

INPUTS

CLK : SHIFT CLOCK
DI : SERIAL DATA
LD : LOAD
VREFL : LOWER REFERENCE VOLTAGE
VREFU : UPPER REFERENCE VOLTAGE

OUTPUTS

AO1 - AO6 : 8-BIT D/A OUTPUTS
DO : DATA (MSB)

OTHER

NC : NO CONNECTION

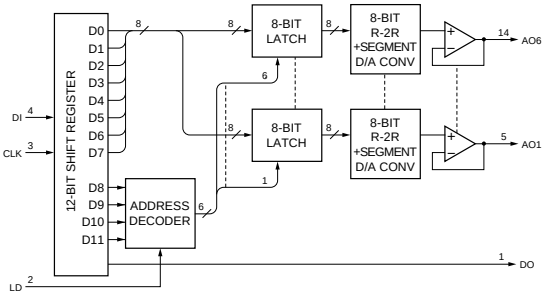

MAX336CAI-T (MAXIM)

8-BIT 6CHANNEL MULTIPLEXER

—TOP VIEW—

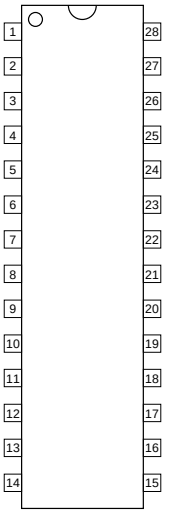

INPUTS

A0 - A3 : ADDRESS
EN : ENABLE

INPUTS/OUTPUTS

COM : COMMON ANALOG SIGNAL
NO1 - NO16 : ANALOG SIGNAL

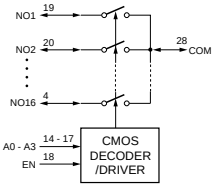

A3	A2	A1	EN	ON SWITCH
×	×	×	×	NONE
0	0	0	0	1
0	0	0	1	2
0	0	1	0	3
0	0	1	1	4
0	1	0	0	5
0	1	0	1	6
0	1	1	0	7
0	1	1	1	8
1	0	0	0	9
1	0	0	1	10
1	0	1	0	11
1	0	1	1	12
1	1	0	0	13
1	1	0	1	14
1	1	1	0	15
1	1	1	1	16

0 : LOW LEVEL
1 : HIGH LEVEL
× : DON'T CARE

PIN NO.	I/O	SIGNAL	PIN NO.	I/O	SIGNAL	PIN NO.	I/O	SIGNAL	PIN NO.	I/O	SIGNAL
1	—	VCC	8	I/O	NO12	15	I	A2	22	I/O	NO4
2	—	NC	9	I/O	NO11	16	I	A1	23	I/O	NO5
3	—	NC	10	I/O	NO10	17	I	A0	24	I/O	NO6
4	I/O	NO16	11	I/O	NO9	18	I	EN	25	I/O	NO7
5	I/O	NO15	12	—	GND	19	I/O	NO1	26	I/O	NO8
6	I/O	NO14	13	—	NC	20	I/O	NO2	27	—	VEE
7	I/O	NO13	14	I	A3	21	I/O	NO3	28	I/O	COM

M66590FP (MITSUBISHI)

USB2.0 CONTROLLER

—TOP VIEW—

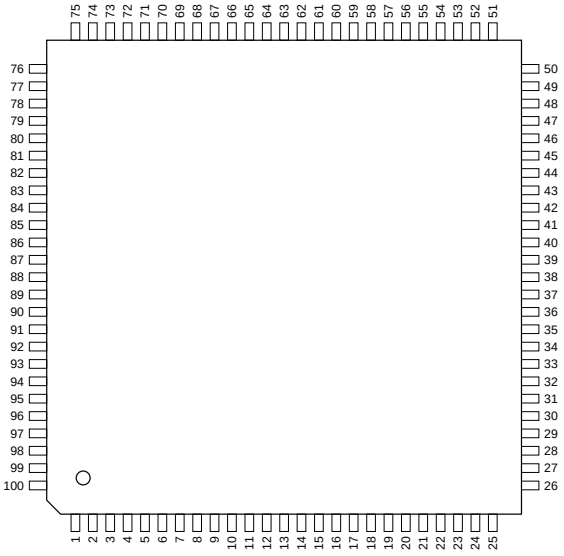

PIN NO.	I/O	SIGNAL	PIN NO.	I/O	SIGNAL	PIN NO.	I/O	SIGNAL	PIN NO.	I/O	SIGNAL
1	—	D.GND	26	I	TEST1	51	I/O	D11	76	—	Vcc
2	—	Vcc	27	I	TEST2	52	I/O	D12	77	—	D.GND
3	—	D.GND	28	O	XOUT	53	I/O	D13	78	—	VccQ
4	—	AFEA.Vcc	29	I	XIN	54	—	VccQ	79	O	INT0
5	—	AFEA.GND	30	—	D.GND	55	—	D.GND	80	O	SOF
6	I/O	DFM	31	—	Vcc	56	—	Vcc	81	I	$\overline{RD}$
7	I/O	DHM	32	—	VccQ	57	I/O	D14	82	I	$\overline{WR0}$
8	—	AFEA.Vcc	33	I	A1	58	I/O	D15	83	I	$\overline{WR1}$
9	I/O	DHP	34	I	A2	59	I/O	D16/PA0	84	I	$\overline{WR2/EXTRG0}$
10	I/O	DFP	35	I	A3	60	I/O	D17/PA1	85	I	$\overline{WR3/EXTRG1}$
11	—	AFEA.GND	36	I	A4	61	I/O	D18/PA2	86	I	$\overline{CS}$
12	—	AFEA.Vcc	37	I	A5	62	I/O	D19/PA3	87	O	DREQ0
13	—	AFED.GND	38	I	A6	63	I/O	D20/PA4	88	I	DACK0
14	—	AFED.Vcc	39	I	A7	64	I/O	D21/PA5	89	I	$\overline{DSTB0}$
15	I	VBUS	40	I/O	D0	65	I/O	D22/PA6	90	I/O	DEND0
16	O	TR ON	41	I/O	D1	66	I/O	D23/PA7	91	I/O	DBHE0
17	I	RPU	42	I/O	D2	67	I/O	D24/PB0	92	I	EXCTRL0
18	—	BIAS.GND	43	I/O	D3	68	I/O	D25/PB1	93	O	DREQ1
19	I	REFRIN	44	I/O	D4	69	I/O	D26/PB2	94	I	DACK1
20	—	BIAS.Vcc	45	I/O	D5	70	I/O	D27/PB3	95	I	$\overline{DSTB1}$
21	—	PLL.GND	46	I/O	D6	71	I/O	D28/PB4	96	I/O	DEND1
22	—	PLL.Vcc	47	I/O	D7	72	I/O	D29/PB5	97	I/O	DBHE1
23	—	D.GND	48	I/O	D8	73	I/O	D30/PB6	98	I	EXCTRL1
24	—	Vcc	49	I/O	D9	74	I/O	D31/PB7	99	I	$\overline{RST}$
25	I	TEST0	50	I/O	D10	75	I	B32	100	—	VccQ

INPUTS

A1 - A7 : ADDRESS BUS
B32 : BUS INTERFACE WIDTH SELECT
$\overline{CS}$: CHIP SELECT
DACK0, DACK1 : DMA ACKNOWLEDGE
$\overline{DSTB0}$, $\overline{DSTB1}$: SPLIT BUS STROBE
$\overline{EXTRG0}$, $\overline{EXTRG1}$: EXTERNAL TRIGGER
EXCTRL0, EXCTRL1 : EXTERNAL CONTROL
$\overline{RD}$: READ STROBE
REFRIN : REFERENCE INPUT
RPU : PULL UP CONTROL
$\overline{RST}$: RESET
TEST0 - TEST2 : TEST
VBUS : VBUS INPUT
$\overline{WR0}$ - $\overline{WR3}$: DATA WRITE STROBE
XIN : CRYSTAL OSCILLATOR

OUTPUTS

DREQ0, DREQ1 : DMA REQUEST
INT0 : INTERRUPT
SOF : SOF OUTPUT
TR ON : PULL UP VOLTAGE
XOUT : CRYSTAL OSCILLATOR

INPUTS/OUTPUTS

D0 - D31 : DATA BUS
DBHE0, DBHE1 : BYTE HIGH ENABLE
DEND0, DEND1 : TRANSFER END
DFM, DFP : USB FULL SPEED DATA
DHM, DHP : USB HIGH SPEED DATA
PA0 - PA7 : PORT A
PB0 - PB7 : PORT B

OTHERS

AFEA.GND : ANALOG GROUND FOR USB
AFEA.Vcc : ANALOG POWER SUPPLY FOR USB
AFED.GND : DIGITAL GROUND FOR USB
AFED.Vcc : DIGITAL POWER SUPPLY FOR USB
BIAS.GND : GROUND FOR BIAS
BIAS.Vcc : POWER SUPPLY FOR BIAS
D.GND : DIGITAL GROUND
PLL.GND : GROUND FOR PLL
PLL.Vcc : POWER SUPPLY FOR PLL
VccQ : POWER SUPPLY FOR I/O

P2010AF-08TR (PULSE CORE)

FREQUENCY MODULATOR

—TOP VIEW—

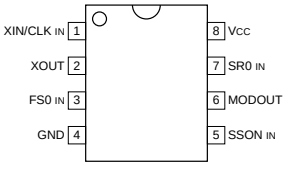

INPUTS

FS0 : SUBCARRIER FREQUENCY
SR0 : SAMPLING RATE
SSON : SPREAD SPECTRUM FREQUENCY MODULATOR ON
XIN/CLK : CRYSTAL OSCILLATOR/CLOCK

OUTPUTS

MODOUT : MODULATOR OUTPUT
XOUT : CRYSTAL OSCILLATOR

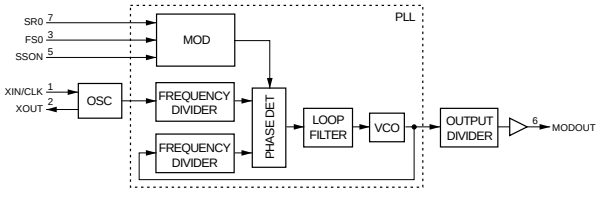

PM-44IX (OAK TECHNOLOGY)

PROGRAMMABLE PROCESSOR
—TOP VIEW—

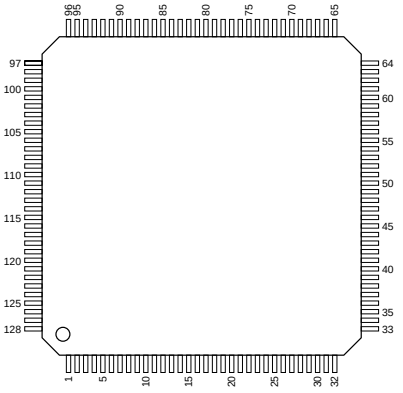

TPS2013ADR (TI)

POWER DISTRIBUTION SWITCHES
—TOP VIEW—

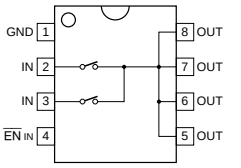

INPUT
$\overline{EN}$: ENABLE

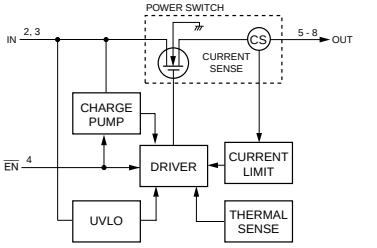

PIN NO.	I/O	SIGNAL	PIN NO.	I/O	SIGNAL	PIN NO.	I/O	SIGNAL	PIN NO.	I/O	SIGNAL
1	O	OD09	33	I	CI	65	O	DA03	97	O	DA07
2	O	OD08	34	I	$\overline{IACK}$	66	O	DA02	98	O	DA08
3	O	OD07	35	I	ICLK	67	O	DA01	99	—	GND
4	O	OD06	36	I	OCLK	68	O	DA00	100	—	Vcc
5	O	OD05	37	I	$\overline{OACK}$	69	O	DA10	101	O	DA09
6	—	GND	38	I	$\overline{CCS}$	70	O	DBA1	102	O	DA11
7	—	Vcc	39	I	$\overline{CWR}$	71	O	DBA0	103	O	DCKE
8	O	OD04	40	I	$\overline{RESET}$	72	—	GND	104	O	DCLK
9	O	OD03	41	I	TEST	73	—	Vcc	105	—	GND
10	O	OD02	42	I	SCAN	74	O	$\overline{DCS0}$	106	—	Vcc
11	O	OD01	43	O	$\overline{ORQ}$	75	O	$\overline{DCS1}$	107	O	$\overline{DCLK}$
12	O	OD00	44	O	$\overline{IRQ}$	76	—	GND	108	I/O	DQS1
13	I	ID15	45	—	GND	77	—	Vcc	109	I/O	DD08
14	I	ID14	46	—	Vcc	78	O	$\overline{DRAS}$	110	I/O	DD09
15	I	ID13	47	—	GND	79	O	$\overline{DCAS}$	111	—	GND
16	I	ID12	48	—	Vcc	80	O	$\overline{DWE}$	112	—	Vcc
17	I	ID11	49	O	$\overline{INT}$	81	I/O	DQS0	113	I/O	DD10
18	I	ID10	50	I/O	BD07	82	I/O	DD07	114	I/O	DD11
19	—	GND	51	I/O	BD06	83	I/O	DD06	115	I/O	DD12
20	—	Vcc	52	I/O	BD05	84	I/O	DD05	116	I/O	DD13
21	I	ID09	53	I/O	BD04	85	—	GND	117	I/O	DD14
22	I	ID08	54	I/O	BD03	86	—	Vcc	118	I/O	DD15
23	I	ID07	55	I/O	BD02	87	I/O	DD04	119	—	GND
24	I	ID06	56	I/O	BD01	88	I/O	DD03	120	—	Vcc
25	I	ID05	57	I/O	BD00	89	—	GND	121	O	OD15
26	I	ID04	58	—	GND	90	—	Vcc	122	O	OD14
27	—	GND	59	—	Vcc	91	I/O	DD02	123	—	GND
28	—	Vcc	60	I	CLK	92	I/O	DD01	124	—	Vcc
29	I	ID03	61	—	Vcc	93	I/O	DD00	125	O	OD13
30	I	ID02	62	—	GND	94	O	DA04	126	O	OD12
31	I	ID01	63	—	GND	95	O	DA05	127	O	OD11
32	I	ID00	64	—	Vcc	96	O	DA06	128	O	OD10

INPUTS
$\overline{CCS}$: COMMAND PORT CHIP SELECT
CI : CONTROL INDEX
CLK : CLOCK
$\overline{CWR}$: COMMAND PORT READ/WRITE SIGNAL
$\overline{IACK}$: INPUT ACKNOWLEDGE
ICLK : INPUT CLOCK
ID00 - ID15 : INPUT PORT BUS
$\overline{OACK}$: OUTPUT ACKNOWLEDGE
OCLK : OUTPUT CLOCK
$\overline{RESET}$: POWER ON RESET
SCAN : TEST SIGNAL
TEST : TEST MODE SELECT

OUTPUTS
DA00 - DA11 : SDRAM ADDRESS
DBA0, DBA1 : SDRAM BANK ADDRESS
$\overline{DCAS}$: SDRAM COLUMN ADDRESS STROBE
DCKE : RESERVED TIE HIGH
DCLK : SDRAM CLOCK
$\overline{DCLK}$: RESERVED TIE HIGH
$\overline{DCS0}$, $\overline{DCS1}$: SDRAM CHIP SELECT
$\overline{DRAS}$: SDRAM ROW ADDRESS STROBE
$\overline{DWE}$: SDRAM WRITE ENABLE
$\overline{INT}$: INTERRUPT
$\overline{IRQ}$: INPUT REQUEST
OD00 - OD15 : OUTPUT PORT BUS
$\overline{ORQ}$: OUTPUT REQUEST

INPUTS/OUTPUTS
BD00 - BD07 : HOST PORT DATA BUS
DD00 - DD15 : SDRAM DATA BUS
DQS0, DQS1 : RESERVED TIE HIGH

Section 6
Spare Parts

6-1. Notes on Repair Parts

1. Safety Related Components Warning

WARNING

Components marked ⚠ are critical to safe operation. Therefore, specified parts should be used in the case of replacement.

2. Standardization of Parts

Some repair parts supplied by Sony differ from those used for the unit. These are because of parts commonality and improvement.
Parts list has the present standardized repair parts.

3. Stock of Parts

Parts marked with “o” at SP (Supply Code) column of the spare parts list may not be stocked. Therefore, the delivery date will be delayed.

4. Harness

Harnesses with no part number are not registered as spare parts.
In need of repair, get components shown in the list and repair using them.

6-2. Exploded Views

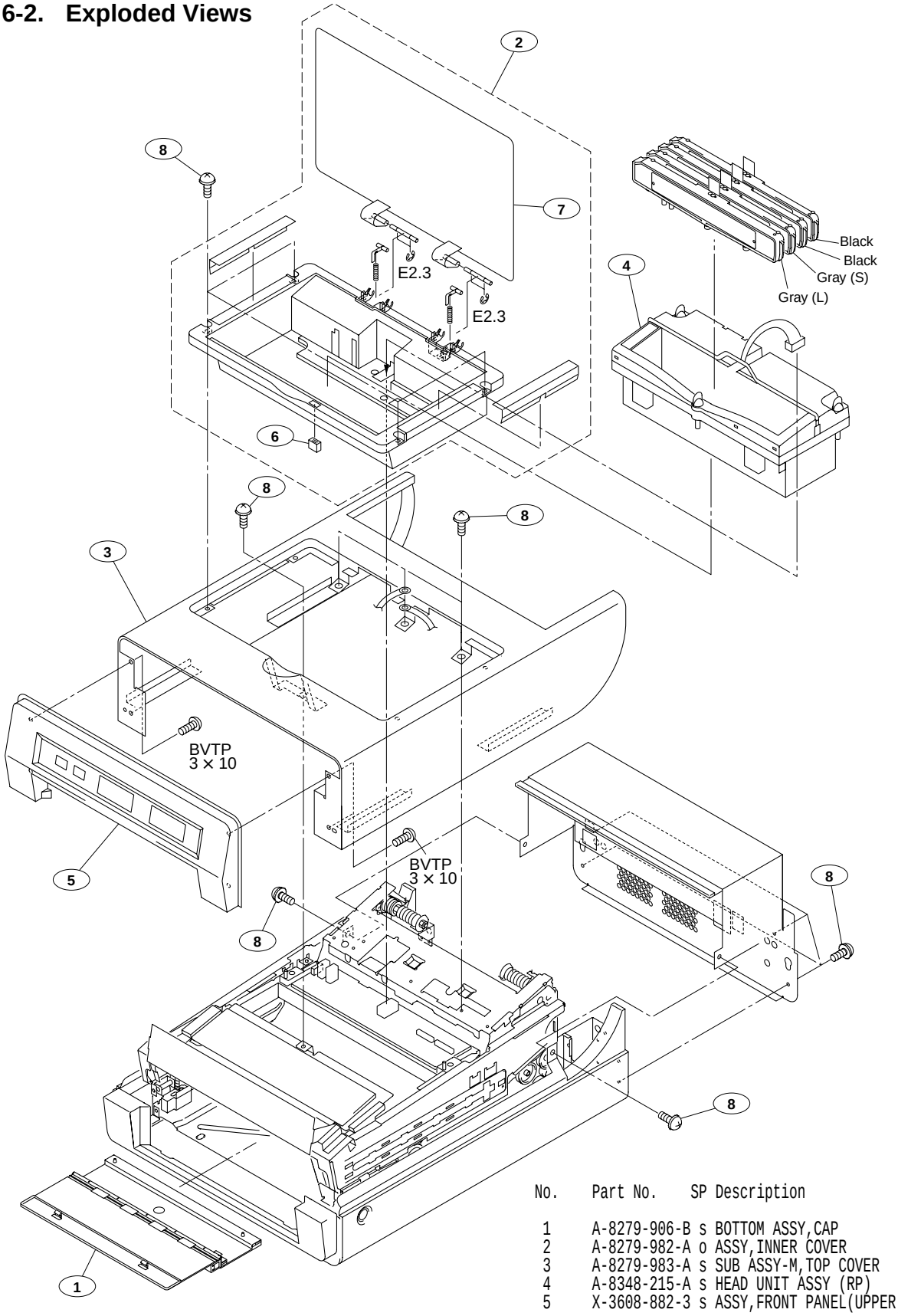

No.	Part No.	SP	Description
1	A-8279-906-B	s	BOTTOM ASSY,CAP
2	A-8279-982-A	o	ASSY,INNER COVER
3	A-8279-983-A	s	SUB ASSY-M,TOP COVER
4	A-8348-215-A	s	HEAD UNIT ASSY (RP)
5	X-3608-882-3	s	ASSY,FRONT PANEL(UPPER)
6	3-736-779-21	s	MAGNET
7	3-853-669-02	s	COVER,HEAD
8	4-034-937-01	s	(+-)BY TAPPING SCREW M3 WITH EXT-TOOTH WASHER 3x8
	7-624-105-04	s	STOP RING 2.3, TYPE -E

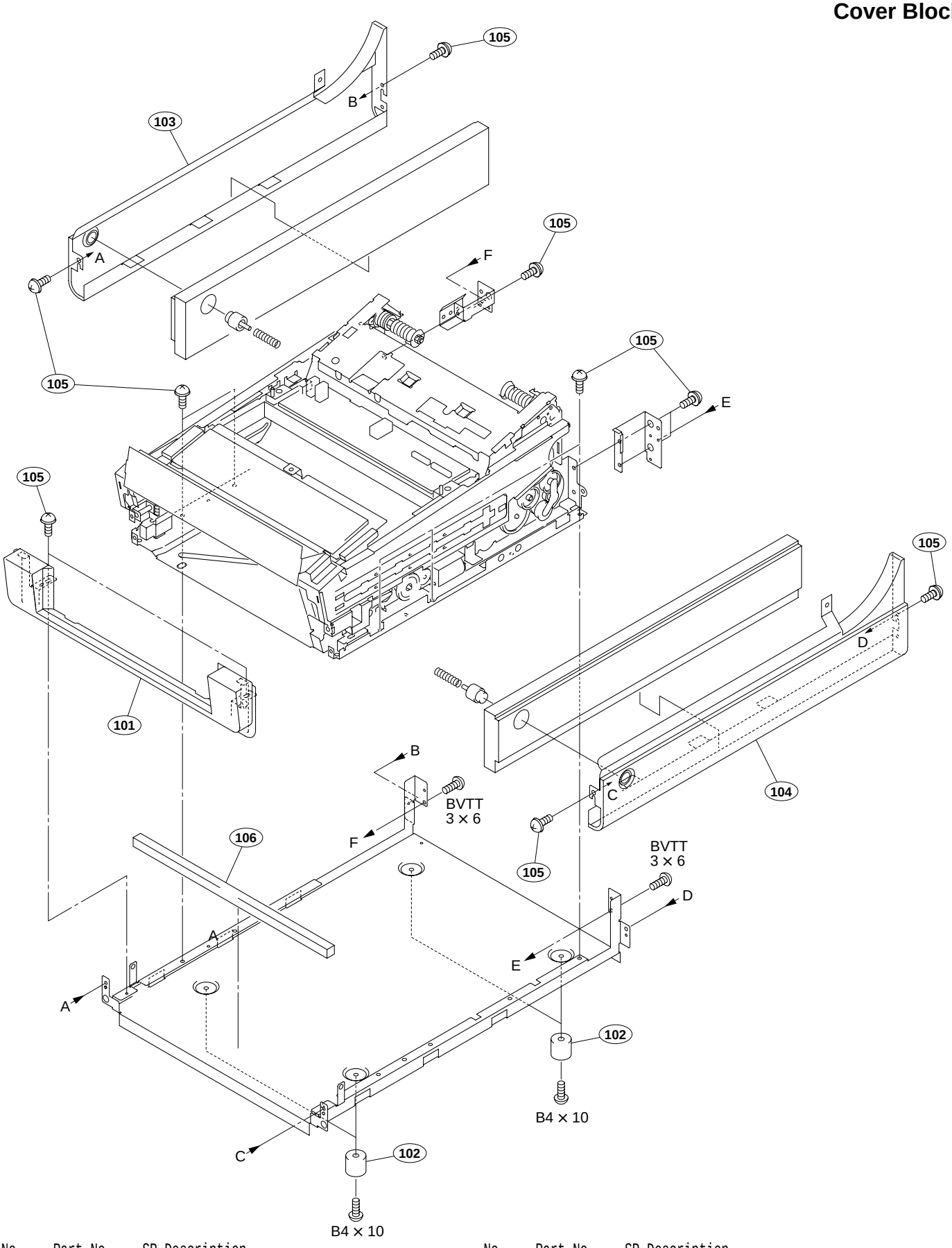

No.	Part No.	SP	Description
101	A-8279-987-A	s	ASSY,FRONTPANELE(DOWN)
102	3-642-656-01	s	FOOT
103	3-853-665-02	s	COVER(L),SIDE
104	3-853-666-02	s	COVER(R),SIDE
105	4-034-937-01	s	(+-)BY TAPPING SCREW M3 WITH EXT-TOOTH WASHER 3x8
106	9-911-841-99	s	CUSHION,METER
	7-682-547-04	s	SCREW +B3X6
	7-682-565-04	s	SCREW +B4X16(EP-FE/CU,NI,CR)

Cam Motor, Power Block

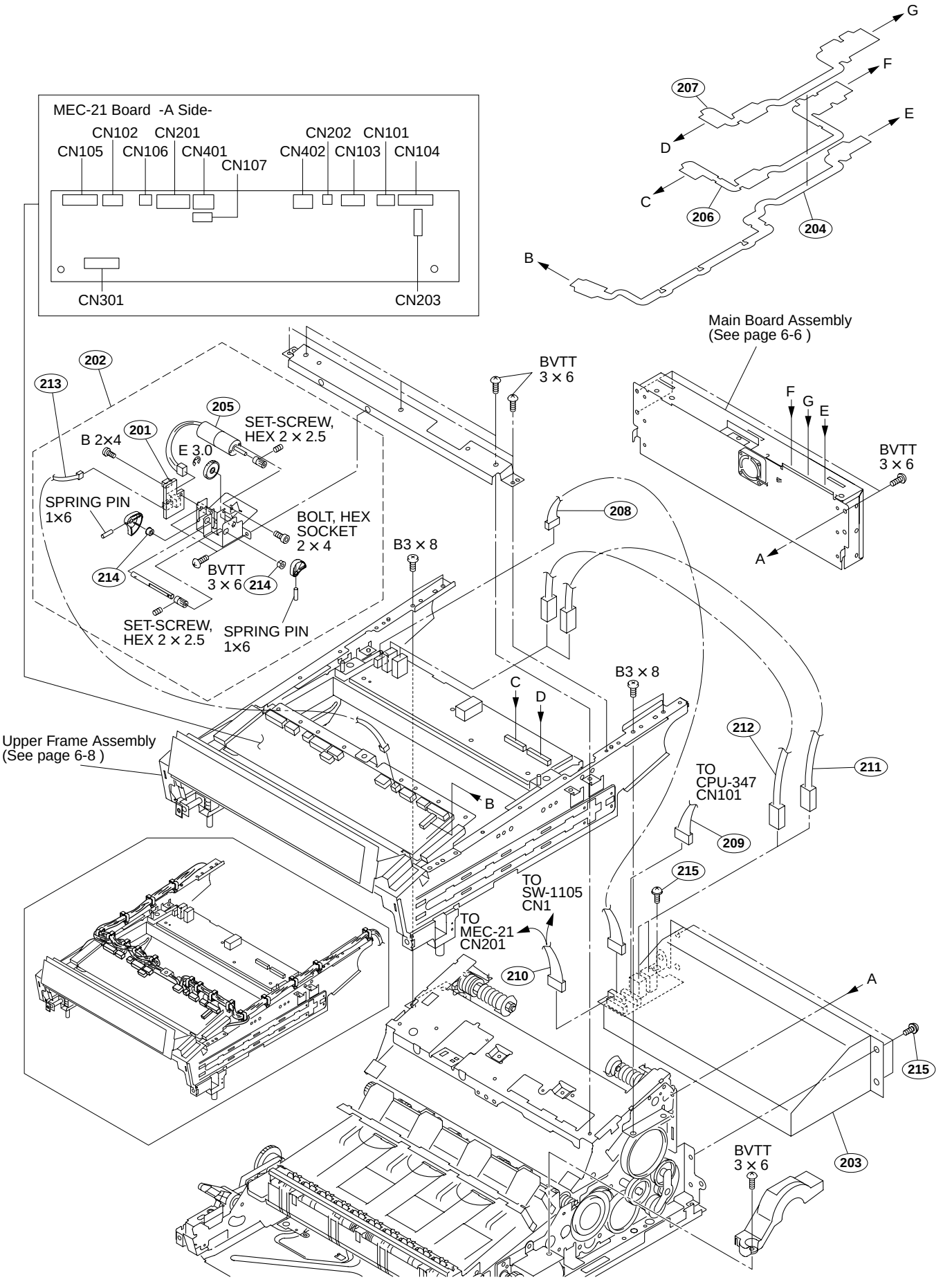

No.	Part No.	SP	Description
201	A-8347-443-A	s	MOUNTED CIRCUIT BOARD, SE-736
202	A-8347-512-A	s	MOTOR SUB ASSY, CAM
203	⚠ 1-468-854-11	s	REGULATOR, SWITCHING
204	1-684-433-11	o	PRINTED WIRING BOARD, IF-881 FLEXIBLE
205	1-787-054-11	s	MOTOR, DC GEARED
206	1-860-258-11	o	PRINTED WIRING BOARD, DIO-72 FLEXIBLE
207	1-860-259-11	o	PRINTED WIRING BOARD, DIO-73 FLEXIBLE
208	1-962-585-21	o	HARNESS, SUB (CN)
209	1-962-586-11	o	HARNESS, SUB (CPU)
210	1-962-587-22	o	HARNESS, SUB (MEC)
211	1-962-594-21	o	HARNESS, SUB (VH)
212	1-962-595-21	o	HARNESS, SUB (VH-GND)
213	1-962-598-12	o	HARNESS, SUB (POMP 1 SENSOR)
214	3-636-475-01	s	BEARING
215	4-034-937-01	s	(+-)BY TAPPING SCREW M3 WITH EXT-TOOTH WASHER 3x8
	7-621-731-08	s	SET-SCREW,HEX 2X2.5(FLAT) ST
	7-621-772-10	s	SCREW +B2X4
	7-624-106-04	s	STOP RING, TYPE-E3(CZN-N4)
	7-626-305-21	s	SPRING PIN 1X6 (STEEL)
	7-682-547-04	s	SCREW +B3X6
	7-682-548-09	s	SCREW +B 3X8
	7-683-480-14	o	BOLT,HEXAGON SOCKET 2X4
	7-685-871-01	s	SCREW,+BVTT 3X6

Main Board Block

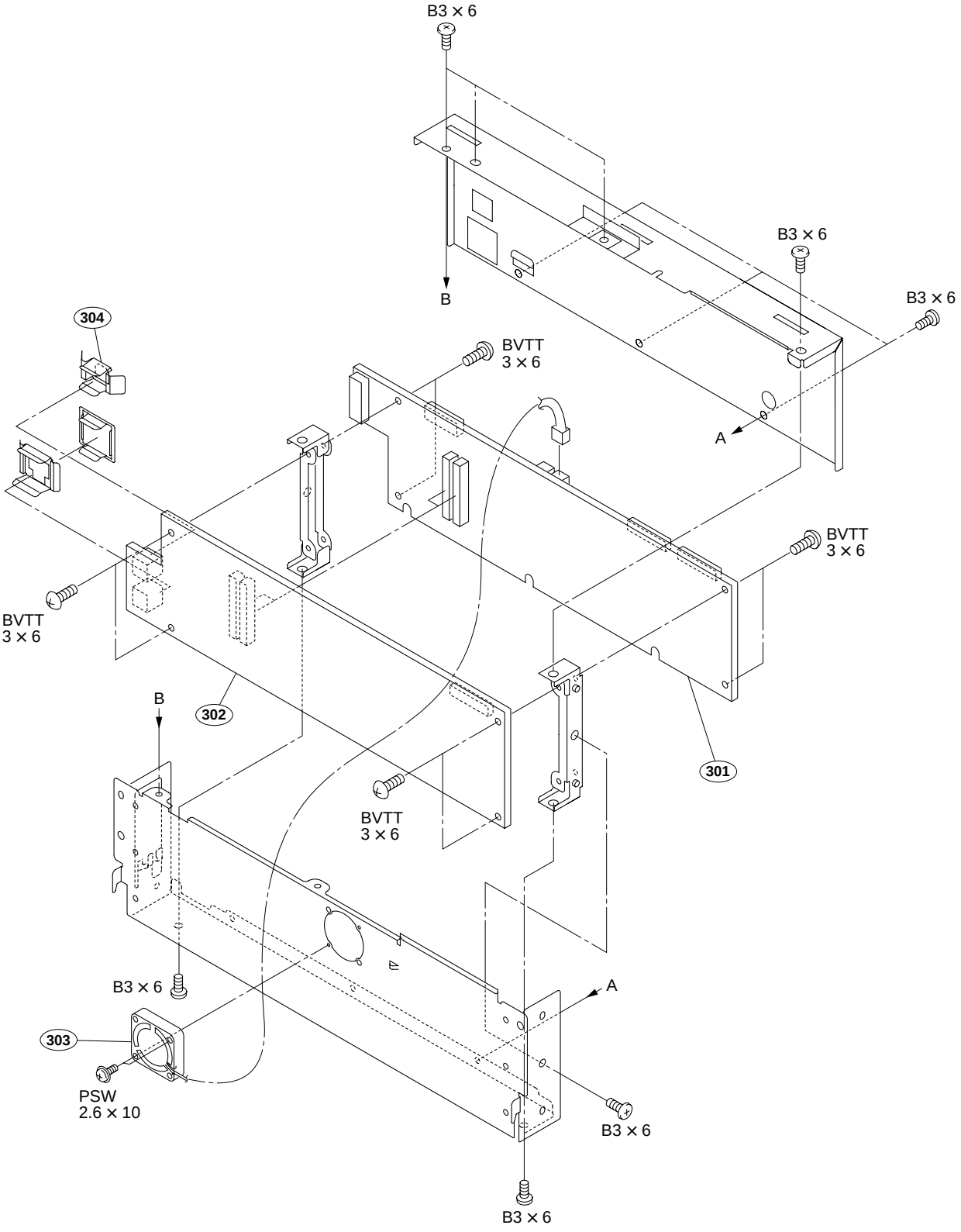

No.	Part No.	SP	Description
301	A-8347-451-A	s	MOUNTED CIRCUIT BOARD, CPU-347
302	A-8347-453-A	s	MOUNTED CIRCUIT BOARD, CPU-357
303	1-763-927-11	s	FAN, DC (SQUARE 25)
304	3-776-934-01	o	USB PLATE,GROUND
	7-621-759-75	s	SCREW,+PSW 2.6X10(EP-FE/ZN/CM2
	7-682-547-04	s	SCREW +B3X6
	7-685-871-01	s	SCREW,+BVTT 3X6

Upper Frame Block

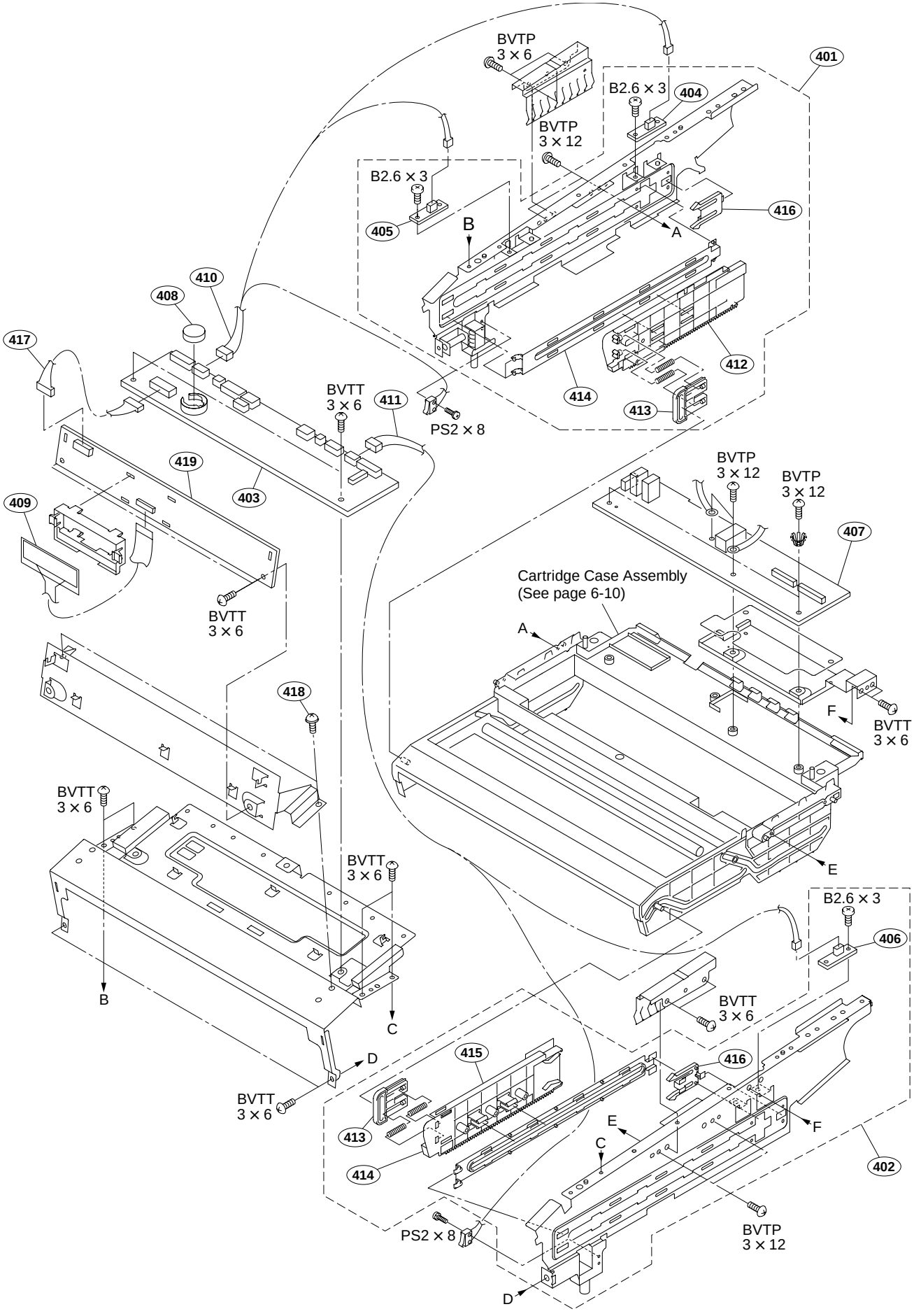

No.	Part No.	SP	Description
401	A-8279-890-A	o	ASSY,UPPER FRAME(L)
402	A-8279-891-A	o	ASSY,UPPER FRAME(R)
403	A-8348-078-A	s	MOUNTED CIRCUIT BOARD, MEC-21
404	A-8347-440-A	s	MOUNTED CIRCUIT BOARD, SE-673
405	A-8347-441-A	s	MOUNTED CIRCUIT BOARD, SE-674
406	A-8347-444-A	s	MOUNTED CIRCUIT BOARD, SE-737
407	A-8347-449-A	s	MOUNTED CIRCUIT BOARD, CN-2393
408	⚠ 1-528-174-11	s	BATTERY, LITHIUM (CR2032 TYPE)
409	1-804-542-11	s	LCD MODULE
410	1-962-596-11	o	HARNESS, SUB (CAP SWITCHING)
411	1-962-597-12	o	HARNESS, SUB (LIMIT SWITCH)
412	3-806-733-01	s	RACK (L)
413	3-806-734-01	s	DAMPER
414	3-806-736-01	s	RAIL,SLIDE
415	3-806-737-01	s	RACK (R)
416	3-806-866-01	s	STOPPER,RUCK
417	1-962-757-12	o	HARNESS, SUB (FP)
418	4-034-937-01	s	(+-)BY TAPPING SCREW M3 WITH EXT-TOOTH WASHER 3x8
419	A-8348-076-A	s	MOUNTED CIRCUIT BOARD, FP-138
	7-621-775-00	s	SCREW +B2.6X3(EP-FE/ZNBK/CM2)
	7-624-105-04	s	STOP RING 2.3, TYPE -E
	7-624-106-04	s	STOP RING, TYPE-E3(CZN-N4)
	7-628-253-35	s	SCREW,+PS 2X8
	7-685-648-79	s	SCREW +BV3X12((EP-FE/ZNBK/CM2)
	7-685-871-01	s	SCREW,+BVTT 3X6

Cartridge Case Block

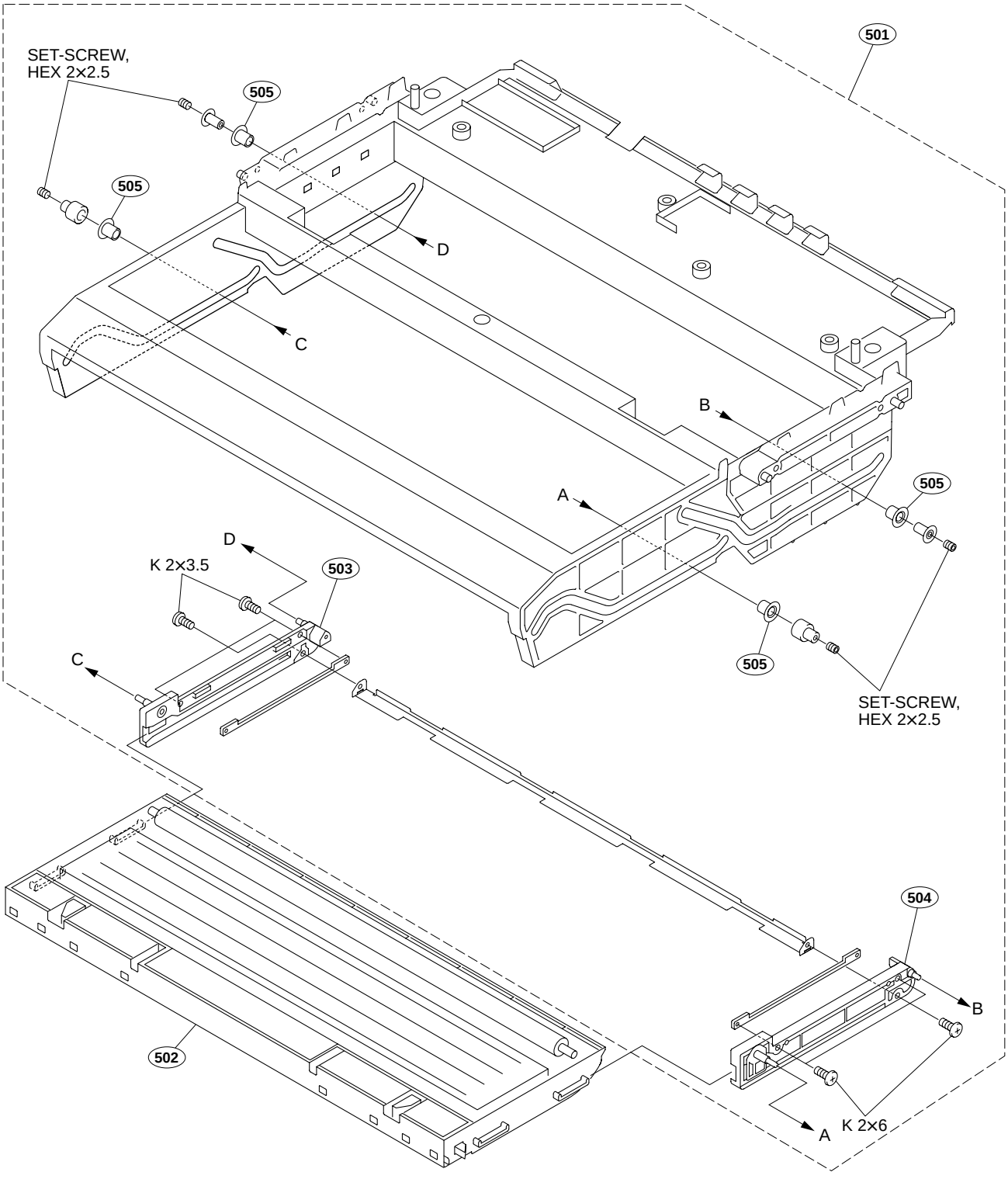

No.	Part No.	SP	Description
501	A-8279-892-A	s	ASSY,CARTRIDGE CASE
502	A-1063-139-A	s	CAP ASSY(RP)
503	X-3608-749-3	s	ASSY,CAP HOLDER(L)
504	X-3608-750-2	s	ASSY,CAP HOLDER(R)
505	3-809-965-51	s	BEARING(ROLLER)(A)
	7-621-731-08	s	SET-SCREW,HEX 2X2.5(FLAT) ST
	7-627-452-58	s	SCREW +K2X6(EP-FE/ZNBK/CM2)
	7-627-452-98	s	SCREW +K2X3.5(EP-FE/ZNBK/CM2)

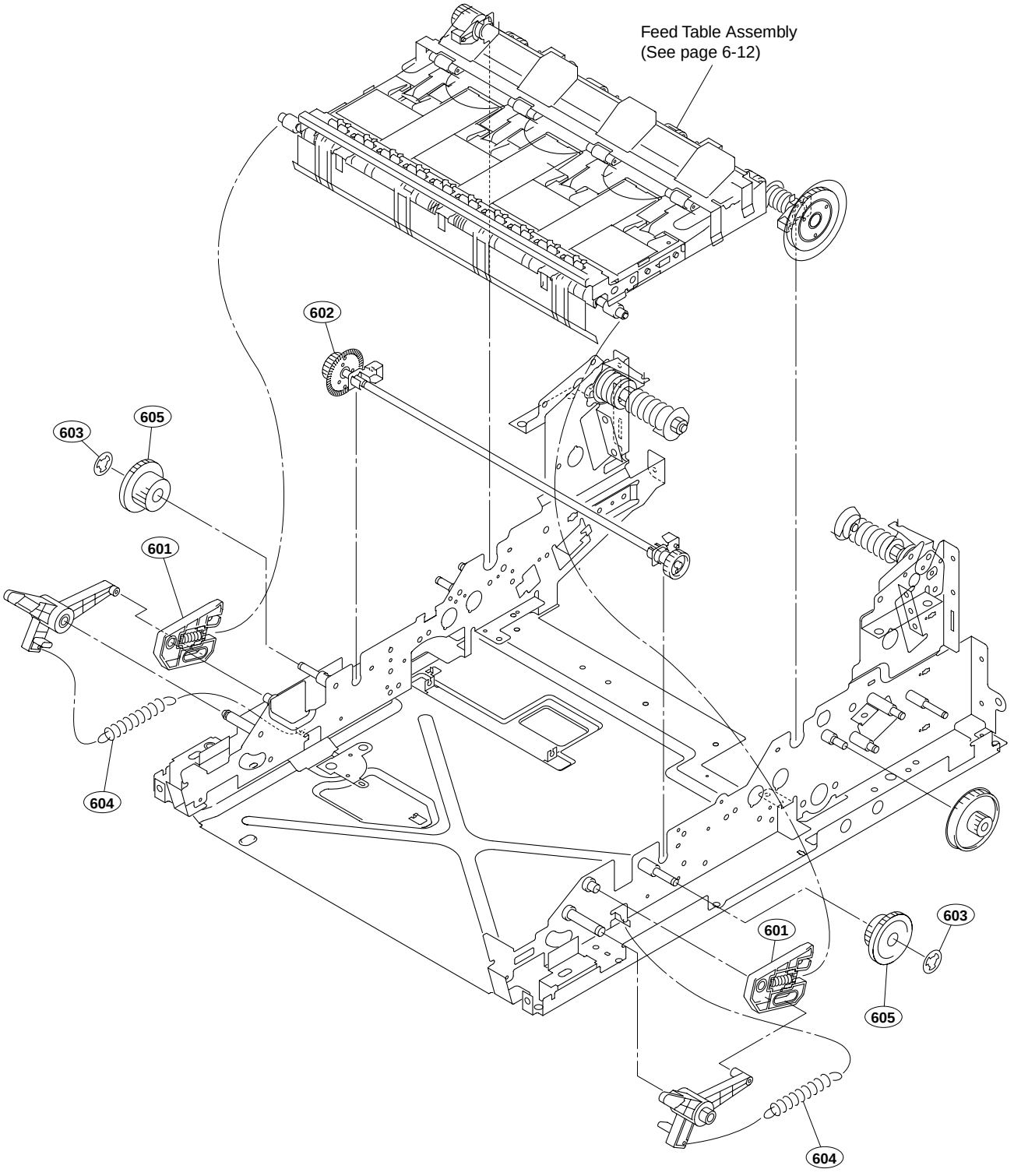

No.	Part No.	SP	Description	
601	A-8279-888-A	s	ASSY,UPDOWN LEVER(A)	
602	X-3608-711-1	s	SUB ASSY,CONNECT GEAR	
603	3-696-510-01	s	WASHER(3),STOPPER	(PLA)
604	3-806-731-02	s	SPRING(A),EXTENSION	
605	3-806-812-01	s	GEAR,RUCK	

Chassis Block 2

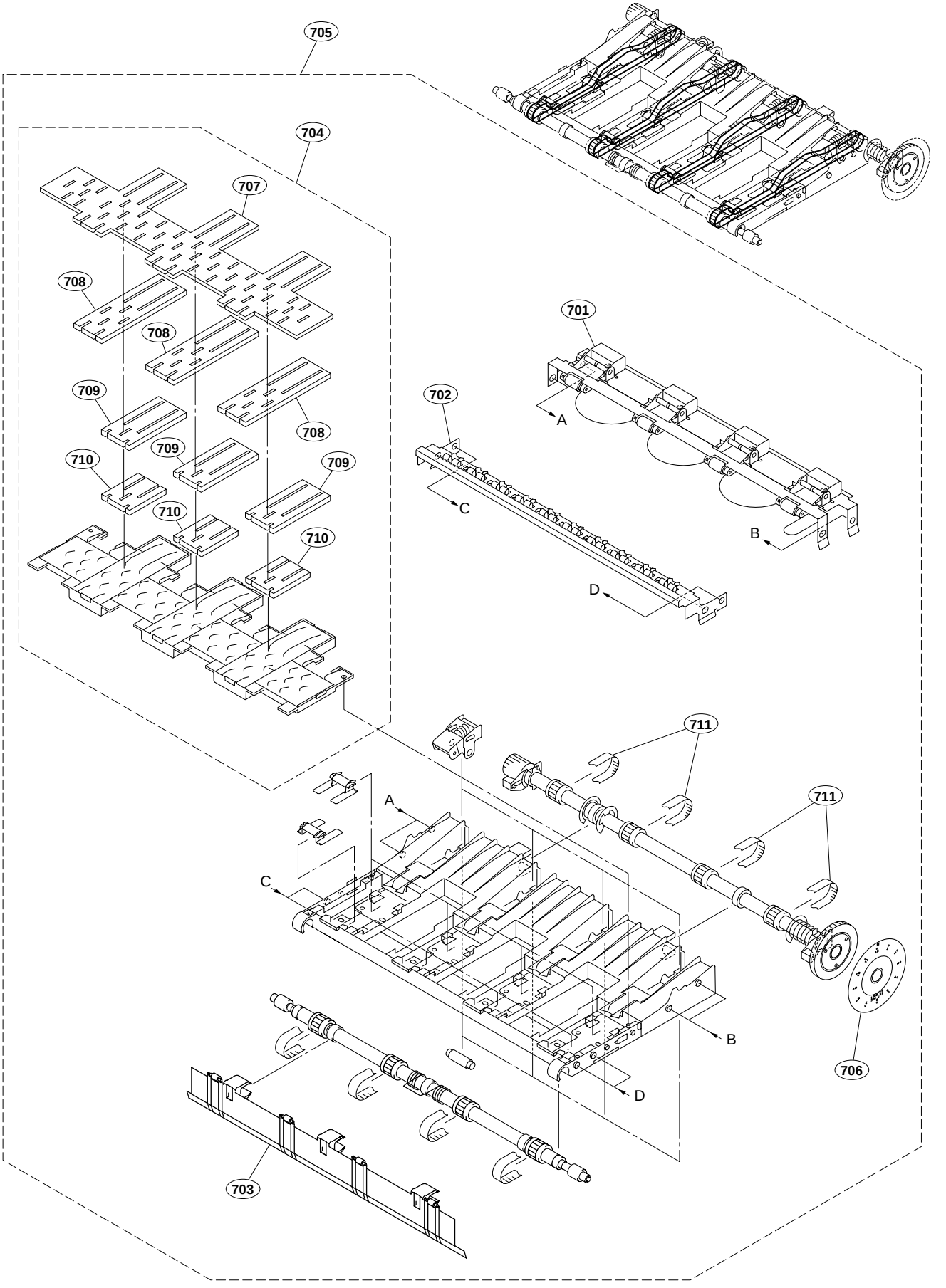

No.	Part No.	SP	Description
701	A-8279-887-A	s	ASSY,PINCH ROLLER
702	A-8279-889-B	s	ASSY,SPUR
703	A-8279-910-B	s	ASSY,PAPER GATE
704	A-8279-915-B	s	ASSY,RESERVER
705	A-8347-519-A	s	TABLE ASSY, FEED
706	X-3608-709-1	s	SUB ASSY,ENCODER DISC
707	3-806-857-02	s	SHEET(A),RESERVE
708	3-806-858-01	s	SHEET(B),RESERVE
709	3-806-859-01	s	SHEET(C),RESERVE
710	3-806-860-01	s	SHEET(D),RESERVE
711	3-809-944-01	s	BELT,FEED

Chassis Block 3

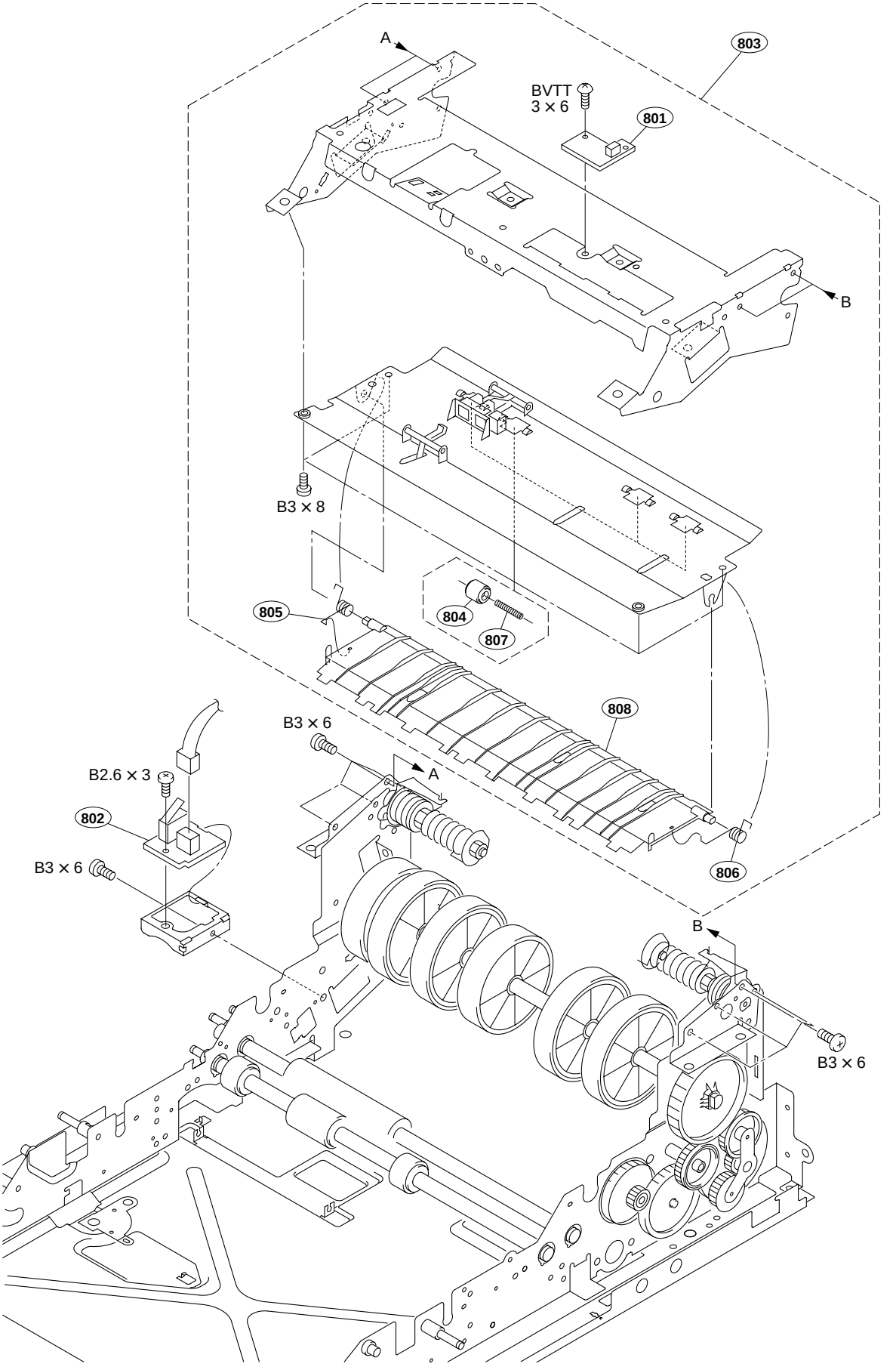

No.	Part No.	SP	Description
801	A-8347-438-A	s	MOUNTED CIRCUIT BOARD, SE-645
802	A-8347-448-A	s	MOUNTED CIRCUIT BOARD, SW-1105
803	A-8347-535-A	s	FRAME ASSY, BACK
804	3-838-806-01	s	ROLLER,SUB
805	3-806-758-01	s	SPRING(L),GUIDE
806	3-806-759-01	s	SPRING(R),GUIDE
807	3-806-760-01	o	SPRING,SUB ROLLER
808	3-806-794-01	s	GUIDE(C)
	7-682-547-04	s	SCREW +B3X6
	7-682-548-04	s	SCREW +B3X8
	7-685-871-01	s	SCREW,+BVTT 3X6

Chassis Block 4

No.	Part No.	SP	Description
901	A-8347-436-A	s	MOUNTED CIRCUIT BOARD, SE-643
902	A-8347-515-A	s	MOTOR ASSY, CAP
903	1-962-588-11	o	HARNESS, SUB (AEDS ENCODER)
904	1-962-592-11	o	HARNESS, SUB (CAP MOTOR)
905	3-696-510-01	s	WASHER(3),STOPPER (PLA)
906	3-806-746-01	s	GEAR(79)
907	3-806-747-01	s	GEAR(97-25)
908	3-806-748-01	s	PLATE,PLANET
909	3-806-749-01	s	GEAR(40),PLANET
910	3-806-750-01	s	GEAR(50)
911	3-806-751-01	s	GEAR(50),PLANET
912	3-806-761-01	s	SPRING,PLANET
913	3-806-793-01	s	GEAR(99)
914	3-806-811-02	s	GEAR,PULLEY
915	3-809-945-01	s	BELT,DRIVE
	7-621-772-10	s	SCREW +B2X4
	7-624-106-04	s	STOP RING, TYPE-E3(CZN-N4)
	7-624-198-01	s	RING,RETAINER C (STEEL)
	7-682-547-04	s	SCREW +B3X6
	7-688-004-01	s	WASHER W4 SMALL

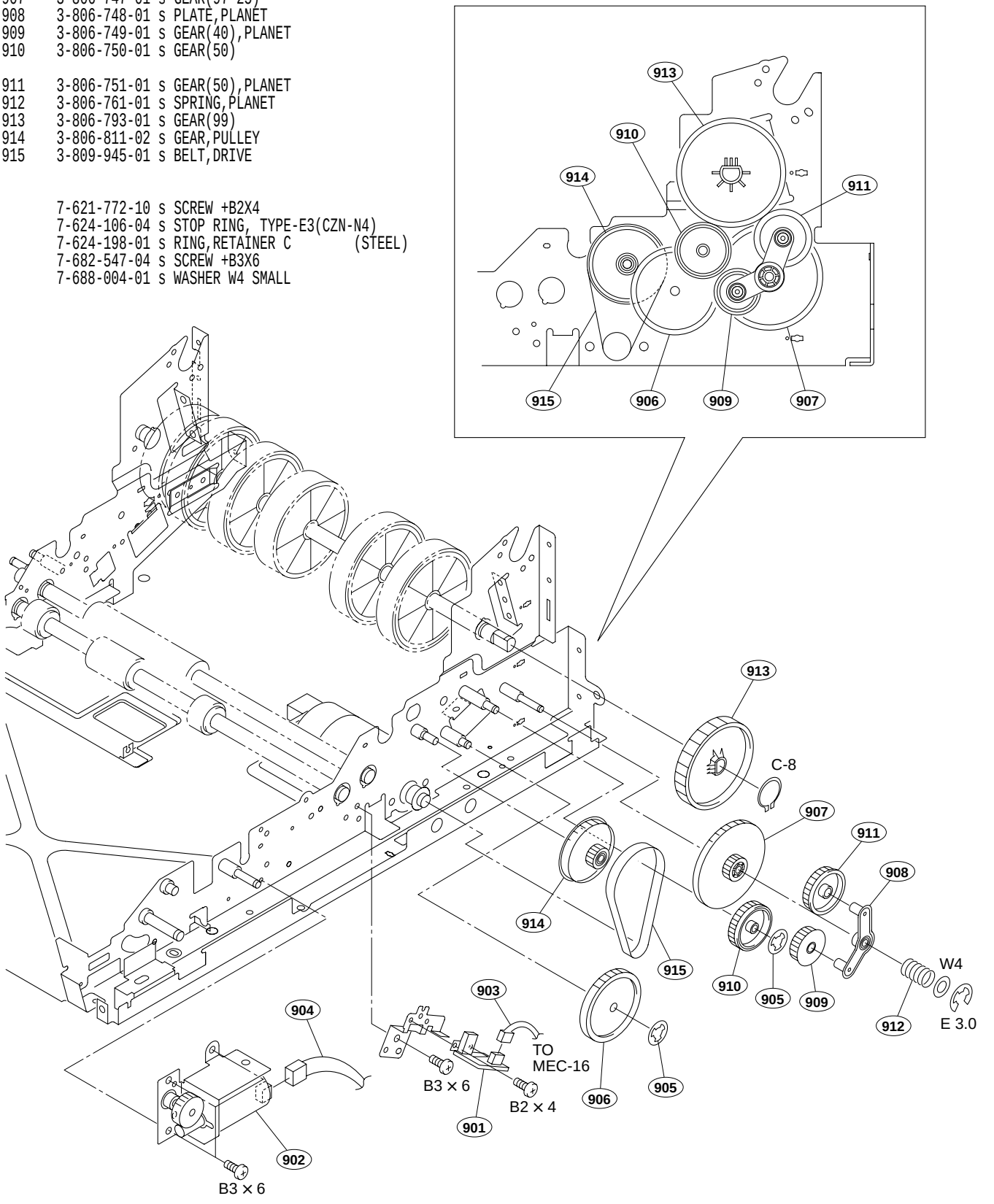

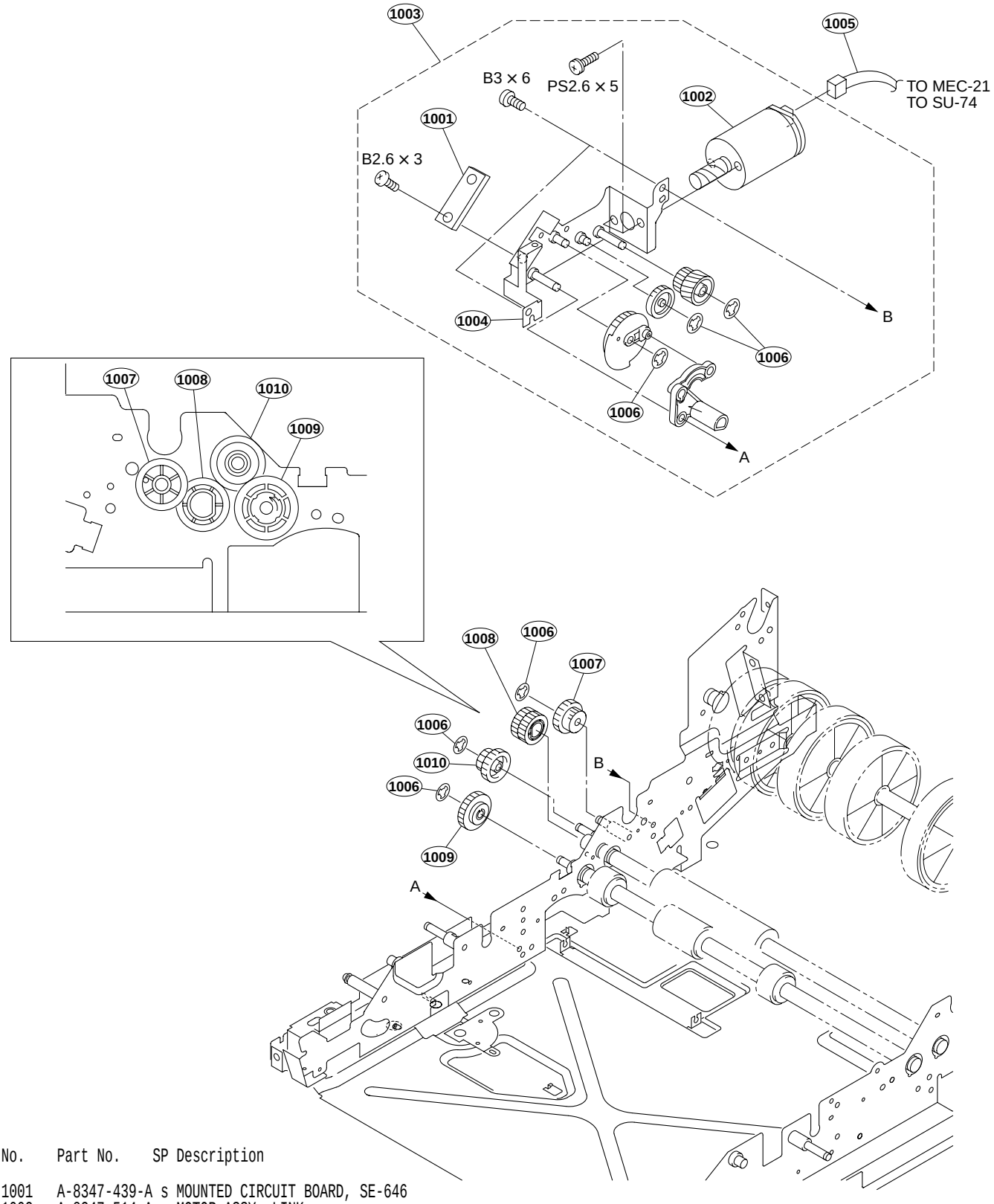

No.	Part No.	SP	Description
1001	A-8347-439-A	s	MOUNTED CIRCUIT BOARD, SE-646
1002	A-8347-514-A	s	MOTOR ASSY, LINK
1003	A-8347-534-A	s	HOLDER ASSY, MOTOR
1004	X-3608-717-1	s	SUB ASSY,MOTOR HOLDER
1005	1-962-593-11	o	HARNESS, SUB(CONVEYANCE MOTOR)
1006	3-696-510-01	s	WASHER(3),STOPPER (PLA)
1007	3-806-698-01	s	GEAR(31-23)
1008	3-806-752-01	s	GEAR(32-22)
1009	3-806-814-01	s	GEAR,PICK UP
1010	3-806-825-01	s	GEAR,IDLER,PICK UP

No.	Part No.	SP	Description
	7-621-775-00	s	SCREW +B2.6X3(EP-FE/ZNBK/CM2)
	7-628-254-00	s	SCREW +PS 2.6X5
	7-682-547-04	s	SCREW +B3X6

Chassis Block 6

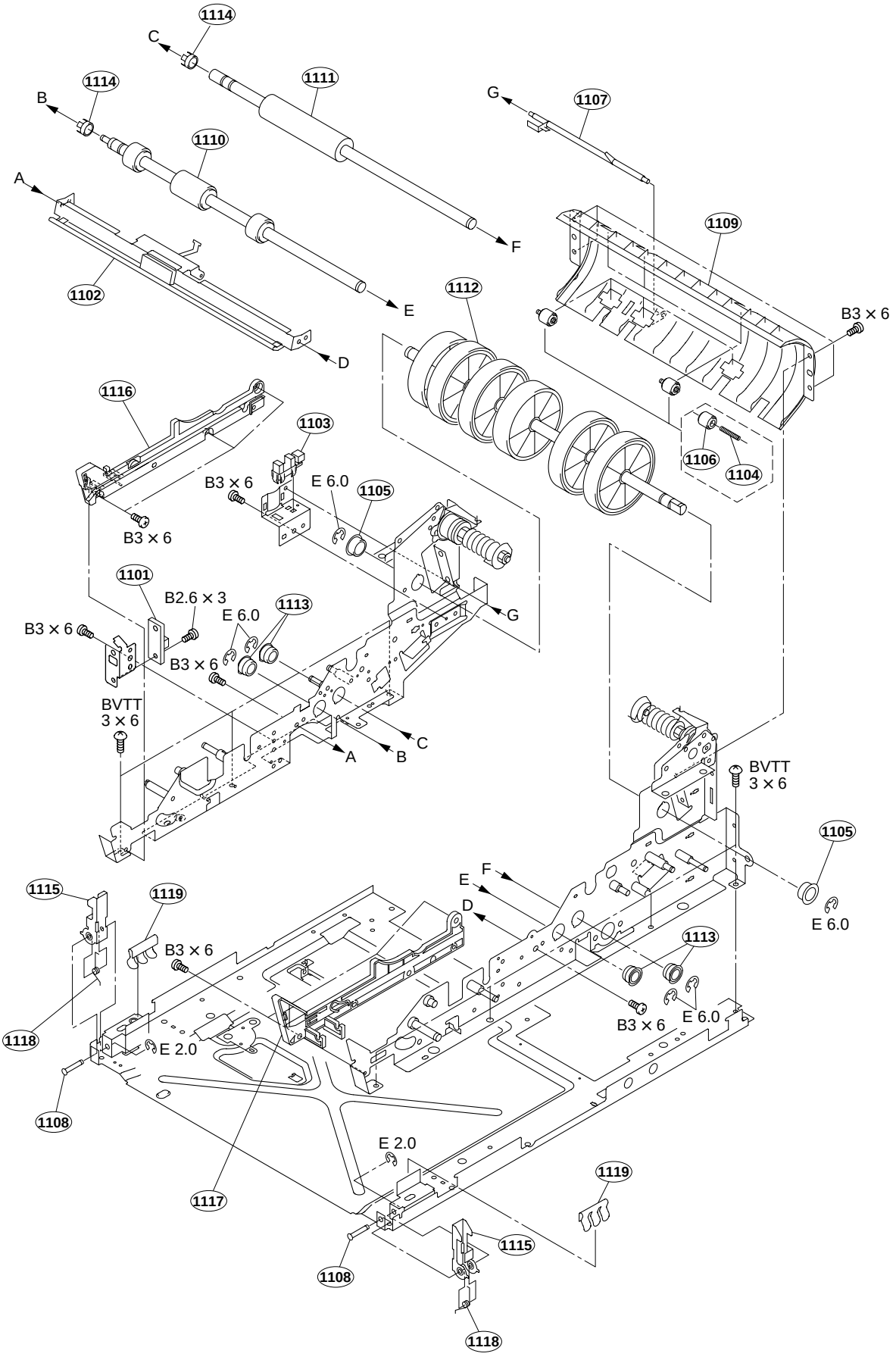

No.	Part No.	SP	Description
1101	A-8347-437-A	s	MOUNTED CIRCUIT BOARD, SE-644
1102	A-8347-532-A	s	HOLDER ASSY, PE SENSOR
1103	1-476-936-11	s	SENSOR, PHOTO MICRO
1104	3-806-652-02	o	SPRING,SUB ROLLER
1105	3-806-661-01	s	BEARING
1106	3-838-806-01	s	ROLLER,SUB
1107	3-806-688-01	s	ACC(A),DETECTION
1108	3-806-705-01	s	SHAFT,HOOK FULCRUM
1109	3-806-741-01	o	GUIDE,REVERSE
1110	3-806-743-03	s	ROLLER,PICKUP
1111	3-806-744-02	s	ROLLER,FEED
1112	3-806-745-01	o	ROLLER,REVERSE
1113	3-806-789-01	s	BEARING(8)
1114	3-806-795-01	s	SPACER
1115	3-806-819-01	s	HOOK
1116	3-806-842-01	s	GUIDE(L),CASSETTE
1117	3-806-843-01	s	GUIDE(R),CASSETTE
1118	3-806-853-01	s	SPRING,TORSION
1119	3-806-865-02	s	GASKET
	7-621-775-00	s	SCREW +B2.6X3(EP-FE/ZNBK/CM2)
	7-624-104-04	s	STOP RING,E-2
	7-624-110-04	s	STOP RING 6.0 TYPE-E
	7-682-547-04	s	SCREW +B3X6
	7-685-871-01	s	SCREW,+BVTT 3X6

Chassis Block 7

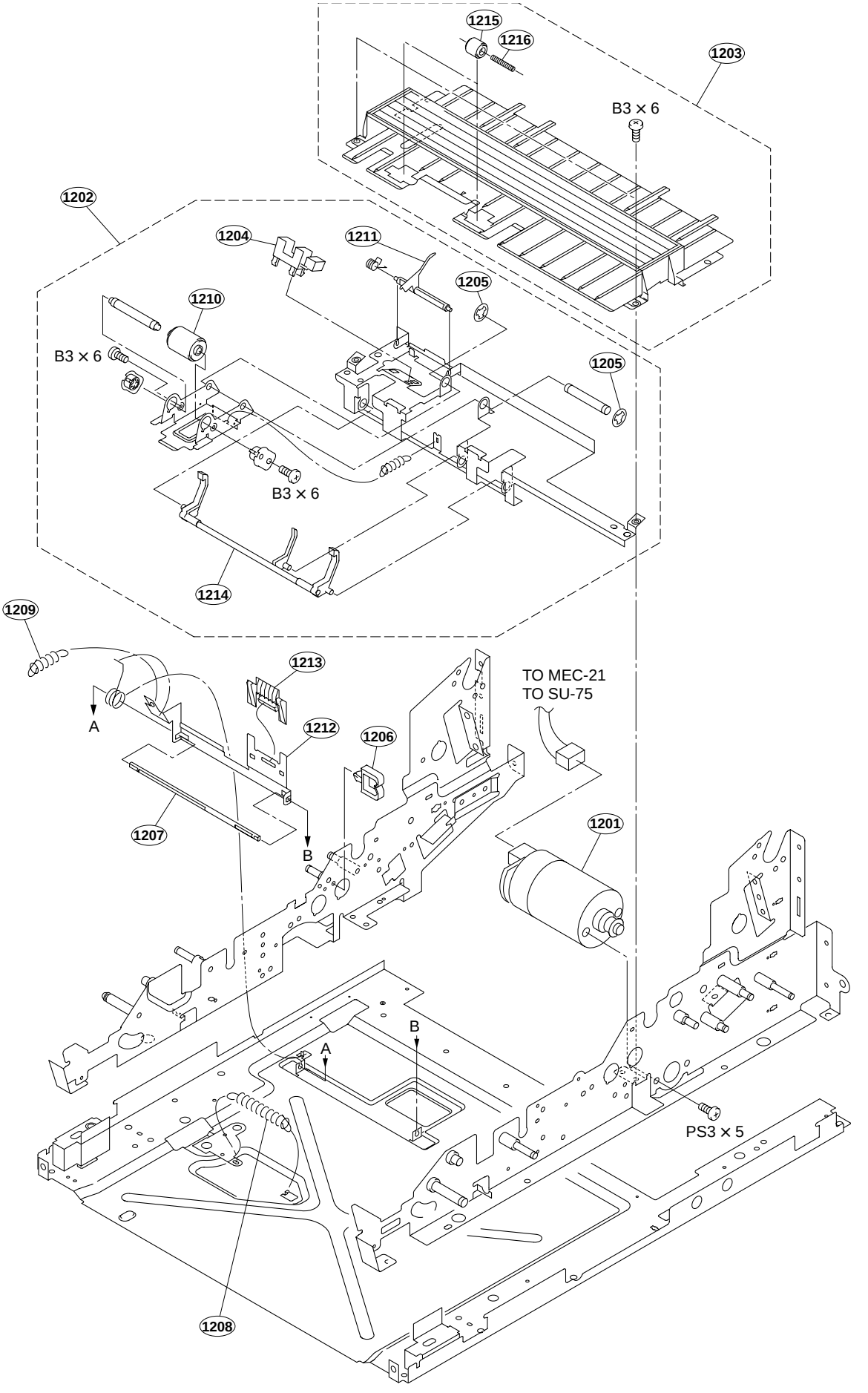

No.	Part No.	SP	Description
1201	A-8347-513-A	s	MOTOR ASSY, CONVEYANCE
1202	A-8347-543-A	s	ROLLER ASSY, SEPARETION
1203	A-8347-545-A	s	GUIDE (A) ASSY
1204	1-476-936-11	s	SENSOR, PHOTO MICRO
1205	3-696-510-01	s	WASHER(3),STOPPER (PLA)
1206	3-742-419-01	o	CLAMP, HARNESS
1207	3-806-666-01	s	SHAFT(PLATE LIFTER)
1208	3-806-791-02	s	SPRING,EXTENSION
1209	3-806-799-01	s	SPRING,EXTENSION
1210	3-806-813-01	s	ROLLER,SEPARATE
1211	3-806-815-01	s	DETECTION,SEPARATE
1212	3-806-832-01	s	LIFTER,PLATE
1213	3-806-833-01	s	COVER,PLATE LIFTER
1214	3-806-841-01	s	ARM,BARRIER,PAPER
1215	3-838-806-01	s	ROLLER,SUB
1216	3-806-760-01	o	SPRING,SUB ROLLER
	7-682-547-04	s	SCREW +B3X6
	7-682-646-09	s	SCREW +PS 3X5
	7-685-646-79	s	SCREW +BVTP 3X8

6-3. Electrical Parts List

CN-2393 BOARD

Ref. No. or Q'ty	Part No.	SP	Description
2pcs	7-621-772-40	s	SCREW +B 2X8(EP-FE/ZNBK/CM2)
C1	1-127-820-11	s	CAPACITOR, SQUARE CHIP 4.7MF
C2	1-127-820-11	s	CAPACITOR, SQUARE CHIP 4.7MF
C3	1-125-777-11	s	CAPACITOR CERAMIC 0.1MF/10V
C4	1-107-826-11	s	CAPACITOR,CHIP CERAMIC 0.1MF
C5	1-164-936-11	s	CAPACITOR,CHIP CERAMIC 680PF
C6	1-164-937-11	s	CAPACITOR,CHIP CERAMIC 1000PF
C7	1-128-416-11	s	CAPACITOR ELECT 100MF/16V(105C
C8	1-107-826-11	s	CAPACITOR,CHIP CERAMIC 0.1MF
C9	1-164-874-11	s	CAPACITOR,CHIP CERAMIC 100PF
C10	1-115-339-11	s	CAPACITOR,CERAMIC 0.1MF/50V
C12	1-164-874-11	s	CAPACITOR,CHIP CERAMIC 100PF
C13	1-164-874-11	s	CAPACITOR,CHIP CERAMIC 100PF
C16	1-135-960-91	s	CAP, CHIP CERAMIC 10MF B(3225)
C17	1-164-874-11	s	CAPACITOR,CHIP CERAMIC 100PF
C18	1-125-777-11	s	CAPACITOR CERAMIC 0.1MF/10V
C20	1-164-874-11	s	CAPACITOR,CHIP CERAMIC 100PF
C21	1-135-366-11	s	CAPACITOR ELECT 100MF (SMD)
C22	1-135-366-11	s	CAPACITOR ELECT 100MF (SMD)
C23	1-127-820-11	s	CAPACITOR, SQUARE CHIP 4.7MF
C24	1-115-339-11	s	CAPACITOR,CERAMIC 0.1MF/50V
C25	1-125-777-11	s	CAPACITOR CERAMIC 0.1MF/10V
C26	1-125-777-11	s	CAPACITOR CERAMIC 0.1MF/10V
C27	1-128-416-11	s	CAPACITOR ELECT 100MF/16V(105C
C28	1-127-573-11	s	CAPACITOR,CERAMIC 1MFB(2012)
C29	1-127-820-11	s	CAPACITOR, SQUARE CHIP 4.7MF
C30	1-125-777-11	s	CAPACITOR CERAMIC 0.1MF/10V
C31	1-127-820-11	s	CAPACITOR, SQUARE CHIP 4.7MF
C32	1-107-826-11	s	CAPACITOR,CHIP CERAMIC 0.1MF
C33	1-127-820-11	s	CAPACITOR, SQUARE CHIP 4.7MF
C34	1-107-826-11	s	CAPACITOR,CHIP CERAMIC 0.1MF
C35	1-164-874-11	s	CAPACITOR,CHIP CERAMIC 100PF
C36	1-164-874-11	s	CAPACITOR,CHIP CERAMIC 100PF
C38	1-164-874-11	s	CAPACITOR,CHIP CERAMIC 100PF
C39	1-164-874-11	s	CAPACITOR,CHIP CERAMIC 100PF
C40	1-135-960-91	s	CAP, CHIP CERAMIC 10MF B(3225)
C41	1-115-339-11	s	CAPACITOR,CERAMIC 0.1MF/50V
C42	1-115-339-11	s	CAPACITOR,CERAMIC 0.1MF/50V
C43	1-164-937-11	s	CAPACITOR,CHIP CERAMIC 1000PF
C44	1-115-339-11	s	CAPACITOR,CERAMIC 0.1MF/50V
C201	1-164-943-11	s	CAPACITOR,CHIP CERAMIC 0.01MF
C202	1-164-943-11	s	CAPACITOR,CHIP CERAMIC 0.01MF
C203	1-127-573-11	s	CAPACITOR,CERAMIC 1MFB(2012)
C204	1-127-573-11	s	CAPACITOR,CERAMIC 1MFB(2012)
C205	1-164-943-11	s	CAPACITOR,CHIP CERAMIC 0.01MF
C206	1-164-943-11	s	CAPACITOR,CHIP CERAMIC 0.01MF
C207	1-127-573-11	s	CAPACITOR,CERAMIC 1MFB(2012)
C208	1-127-573-11	s	CAPACITOR,CERAMIC 1MFB(2012)
C301	1-164-874-11	s	CAPACITOR,CHIP CERAMIC 100PF
C302	1-164-943-11	s	CAPACITOR,CHIP CERAMIC 0.01MF
C303	1-164-943-11	s	CAPACITOR,CHIP CERAMIC 0.01MF
C304	1-164-943-11	s	CAPACITOR,CHIP CERAMIC 0.01MF
C305	1-127-573-11	s	CAPACITOR,CERAMIC 1MFB(2012)
C306	1-127-573-11	s	CAPACITOR,CERAMIC 1MFB(2012)
C307	1-127-573-11	s	CAPACITOR,CERAMIC 1MFB(2012)
C308	1-125-777-11	s	CAPACITOR CERAMIC 0.1MF/10V
C309	1-125-777-11	s	CAPACITOR CERAMIC 0.1MF/10V
C310	1-125-777-11	s	CAPACITOR CERAMIC 0.1MF/10V

(CN-2393 BOARD)

Ref. No. or Q'ty	Part No.	SP	Description
C311	1-125-777-11	s	CAPACITOR CERAMIC 0.1MF/10V
C312	1-164-874-11	s	CAPACITOR,CHIP CERAMIC 100PF
C313	1-125-777-11	s	CAPACITOR CERAMIC 0.1MF/10V
C314	1-125-777-11	s	CAPACITOR CERAMIC 0.1MF/10V
C315	1-164-874-11	s	CAPACITOR,CHIP CERAMIC 100PF
CN1	1-794-847-21	s	CONNECTOR,100PIN DOCKING(PLUG)
CN2	1-778-651-11	o	CONNECTOR, FFC (ZIF) 40P
CN3	1-778-534-11	o	CONNECTOR, FFC (ZIF) 45P
CN4	1-816-384-11	s	HEADER 10P
CN7	1-564-708-11	o	PIN,CONNECTOR (6P)
D1	8-719-080-03	s	DIODE RB083L-20TE25
D2	8-719-080-03	s	DIODE RB083L-20TE25
D3	8-719-037-96	s	LED CL-190G-CD
D4	8-719-037-96	s	LED CL-190G-CD
D5	8-719-080-03	s	DIODE RB083L-20TE25
D6	8-719-080-03	s	DIODE RB083L-20TE25
D7	8-719-080-03	s	DIODE RB083L-20TE25
D8	8-719-080-03	s	DIODE RB083L-20TE25
D9	8-719-080-03	s	DIODE RB083L-20TE25
D10	8-719-037-96	s	LED CL-190G-CD
D11	8-719-071-34	s	DIODE RB521S-30-TE61
D12	8-719-080-03	s	DIODE RB083L-20TE25
D13	8-719-080-03	s	DIODE RB083L-20TE25
D15	8-719-080-03	s	DIODE RB083L-20TE25
E1	1-535-877-22	s	CHIP,CHECKER (TEST POINT)
E2	1-535-877-22	s	CHIP,CHECKER (TEST POINT)
FB1	1-469-324-21	s	FERRITE, EMI (SMD) 4.7UH
FB2	1-469-324-21	s	FERRITE, EMI (SMD) 4.7UH
FB3	1-469-324-21	s	FERRITE, EMI (SMD) 4.7UH
FB4	1-469-324-21	s	FERRITE, EMI (SMD) 4.7UH
FB5	1-469-324-21	s	FERRITE, EMI (SMD) 4.7UH
FB6	1-469-324-21	s	FERRITE, EMI (SMD) 4.7UH
FB7	1-469-324-21	s	FERRITE, EMI (SMD) 4.7UH
FB10	1-400-047-21	s	FERRITE, EMI (SMD) (1005)
FB11	1-400-047-21	s	FERRITE, EMI (SMD) (1005)
FB13	1-400-047-21	s	FERRITE, EMI (SMD) (1005)
FB15	1-400-047-21	s	FERRITE, EMI (SMD) (1005)
FB16	1-400-047-21	s	FERRITE, EMI (SMD) (1005)
FB17	1-400-047-21	s	FERRITE, EMI (SMD) (1005)
FB18	1-400-047-21	s	FERRITE, EMI (SMD) (1005)
FB20	1-400-162-21	s	FILTER, EMI
FB21	1-400-162-21	s	FILTER, EMI
FB22	1-400-047-21	s	FERRITE, EMI (SMD) (1005)
FB23	1-469-324-21	s	FERRITE, EMI (SMD) 4.7UH
FB24	1-469-324-21	s	FERRITE, EMI (SMD) 4.7UH
FB25	1-469-324-21	s	FERRITE, EMI (SMD) 4.7UH
FB26	1-469-324-21	s	FERRITE, EMI (SMD) 4.7UH
FB27	1-400-047-21	s	FERRITE, EMI (SMD) (1005)
FB28	1-469-324-21	s	FERRITE, EMI (SMD) 4.7UH
FB29	1-400-047-21	s	FERRITE, EMI (SMD) (1005)
FB30	1-400-047-21	s	FERRITE, EMI (SMD) (1005)
FB201	1-400-047-21	s	FERRITE, EMI (SMD) (1005)
FB202	1-400-047-21	s	FERRITE, EMI (SMD) (1005)
FB203	1-400-047-21	s	FERRITE, EMI (SMD) (1005)
FB204	1-400-047-21	s	FERRITE, EMI (SMD) (1005)
FB205	1-400-047-21	s	FERRITE, EMI (SMD) (1005)
FB206	1-400-047-21	s	FERRITE, EMI (SMD) (1005)
FB207	1-400-047-21	s	FERRITE, EMI (SMD) (1005)

(CN-2393 BOARD)

Ref. No. or Q'ty	Part No.	SP	Description
FB208	1-400-047-21	s	FERRITE, EMI (SMD) (1005)
FB209	1-400-047-21	s	FERRITE, EMI (SMD) (1005)
FB210	1-400-047-21	s	FERRITE, EMI (SMD) (1005)
FB211	1-400-047-21	s	FERRITE, EMI (SMD) (1005)
FB212	1-400-047-21	s	FERRITE, EMI (SMD) (1005)
FB213	1-400-047-21	s	FERRITE, EMI (SMD) (1005)
FB214	1-400-047-21	s	FERRITE, EMI (SMD) (1005)
FB215	1-400-047-21	s	FERRITE, EMI (SMD) (1005)
FB216	1-400-047-21	s	FERRITE, EMI (SMD) (1005)
FB217	1-400-047-21	s	FERRITE, EMI (SMD) (1005)
FB218	1-400-047-21	s	FERRITE, EMI (SMD) (1005)
FB219	1-400-047-21	s	FERRITE, EMI (SMD) (1005)
FB220	1-400-047-21	s	FERRITE, EMI (SMD) (1005)
FB221	1-400-047-21	s	FERRITE, EMI (SMD) (1005)
FB222	1-400-047-21	s	FERRITE, EMI (SMD) (1005)
FB223	1-400-047-21	s	FERRITE, EMI (SMD) (1005)
FB224	1-400-047-21	s	FERRITE, EMI (SMD) (1005)
FB225	1-400-047-21	s	FERRITE, EMI (SMD) (1005)
FB226	1-400-047-21	s	FERRITE, EMI (SMD) (1005)
FB227	1-400-047-21	s	FERRITE, EMI (SMD) (1005)
FB228	1-400-047-21	s	FERRITE, EMI (SMD) (1005)
FB229	1-400-047-21	s	FERRITE, EMI (SMD) (1005)
FB230	1-400-047-21	s	FERRITE, EMI (SMD) (1005)
FB231	1-400-047-21	s	FERRITE, EMI (SMD) (1005)
FB232	1-400-047-21	s	FERRITE, EMI (SMD) (1005)
FB301	1-400-047-21	s	FERRITE, EMI (SMD) (1005)
FB302	1-400-047-21	s	FERRITE, EMI (SMD) (1005)
FB303	1-400-047-21	s	FERRITE, EMI (SMD) (1005)
FB304	1-400-047-21	s	FERRITE, EMI (SMD) (1005)
FB305	1-400-047-21	s	FERRITE, EMI (SMD) (1005)
FB306	1-400-047-21	s	FERRITE, EMI (SMD) (1005)
FB307	1-400-047-21	s	FERRITE, EMI (SMD) (1005)
FB308	1-400-047-21	s	FERRITE, EMI (SMD) (1005)
FB309	1-400-047-21	s	FERRITE, EMI (SMD) (1005)
FB310	1-400-047-21	s	FERRITE, EMI (SMD) (1005)
FB311	1-400-047-21	s	FERRITE, EMI (SMD) (1005)
FB312	1-400-047-21	s	FERRITE, EMI (SMD) (1005)
FB313	1-400-047-21	s	FERRITE, EMI (SMD) (1005)
FB314	1-400-047-21	s	FERRITE, EMI (SMD) (1005)
FB315	1-400-047-21	s	FERRITE, EMI (SMD) (1005)
FB316	1-400-047-21	s	FERRITE, EMI (SMD) (1005)
FB317	1-400-047-21	s	FERRITE, EMI (SMD) (1005)
FB318	1-400-047-21	s	FERRITE, EMI (SMD) (1005)
FB319	1-400-047-21	s	FERRITE, EMI (SMD) (1005)
FB320	1-400-047-21	s	FERRITE, EMI (SMD) (1005)
FB321	1-400-162-21	s	FILTER, EMI
FB322	1-400-162-21	s	FILTER, EMI
FB323	1-400-047-21	s	FERRITE, EMI (SMD) (1005)
FB324	1-400-047-21	s	FERRITE, EMI (SMD) (1005)
FB325	1-400-047-21	s	FERRITE, EMI (SMD) (1005)
FB326	1-400-162-21	s	FILTER, EMI
FB327	1-400-162-21	s	FILTER, EMI
IC1	8-759-557-45	s	IC LTC1624IS8
IC2	6-701-921-01	s	IC TPS2013ADR
IC201	8-759-549-14	s	IC SN74LV244APWR
IC202	8-759-549-14	s	IC SN74LV244APWR
IC203	8-759-549-14	s	IC SN74LV244APWR
IC204	8-759-549-14	s	IC SN74LV244APWR

(CN-2393 BOARD)

Ref. No. or Q'ty	Part No.	SP	Description
IC301	8-759-549-14	s	IC SN74LV244APWR
IC302	8-759-549-14	s	IC SN74LV244APWR
IC303	8-759-549-14	s	IC SN74LV244APWR
IC304	8-759-523-84	s	IC TC74VHC14FT (EL)
IC305	8-759-523-78	s	IC TC74VHC00FT(EL)
IC306	8-759-523-84	s	IC TC74VHC14FT (EL)
IC307	8-759-523-84	s	IC TC74VHC14FT (EL)
IC308	8-759-196-96	s	IC TC7SH08FU (TE85R)
IC309	8-759-196-96	s	IC TC7SH08FU (TE85R)
L1	1-416-281-11	s	COIL, CHOKE
L2	1-416-281-11	s	COIL, CHOKE
Q1	8-729-043-71	s	TRANSISTOR SI9426DY-T1
Q2	8-729-929-08	s	TRANSISTOR DTC123JE
Q4	8-729-807-51	s	TRANSISTOR 2SD1623-S
Q6	8-729-929-08	s	TRANSISTOR DTC123JE
Q7	8-729-047-32	s	TRANSISTOR SI4425DY-T1
R1	1-218-965-11	s	RESISTOR, CHIP 10K 1/16W
R2	1-218-953-11	s	RESISTOR, CHIP 1K 1/16W
R3	1-218-953-11	s	RESISTOR, CHIP 1K 1/16W
R4	1-218-951-11	s	RESISTOR, CHIP 680 1/16
R5	1-218-951-11	s	RESISTOR, CHIP 680 1/16
R21	1-218-961-11	s	RESISTOR, CHIP 4.7K 1/16W
R22	1-219-611-21	s	RESISTOR, CHIP 0.047 1W
R23	1-218-951-11	s	RESISTOR, CHIP 680 1/16
R24	1-218-951-11	s	RESISTOR, CHIP 680 1/16
R25	1-218-973-11	s	RESISTOR,CHIP 47K 1/16W (1005)
R28	1-218-949-11	s	RESISTOR,CHIP 470 1/16W
R29	1-218-949-11	s	RESISTOR,CHIP 470 1/16W
R30	1-218-990-11	s	RESISTOR,CHIP 0 1/16W (1005)
R32	1-218-947-11	s	RESISTOR, CHIP 330 1/16W
R35	1-218-953-11	s	RESISTOR, CHIP 1K 1/16W
R42	1-218-990-11	s	RESISTOR,CHIP 0 1/16W (1005)
R43	1-208-707-11	s	RESISTOR,CHIP 10K 1/16W (1005)
R44	1-208-683-11	s	RESISTOR CHIP 1K 1/16W (1005)
R47	1-208-719-11	s	RESISTOR CHIP 33K 1/16W (1005)
R48	1-218-965-11	s	RESISTOR, CHIP 10K 1/16W
R50	1-218-961-11	s	RESISTOR, CHIP 4.7K 1/16W
R51	1-218-965-11	s	RESISTOR, CHIP 10K 1/16W
R54	1-218-973-11	s	RESISTOR,CHIP 47K 1/16W (1005)
R61	1-218-973-11	s	RESISTOR,CHIP 47K 1/16W (1005)
R62	1-218-973-11	s	RESISTOR,CHIP 47K 1/16W (1005)
R63	1-218-949-11	s	RESISTOR,CHIP 470 1/16W
R64	1-218-961-11	s	RESISTOR, CHIP 4.7K 1/16W
R69	1-218-973-11	s	RESISTOR,CHIP 47K 1/16W (1005)
R70	1-218-947-11	s	RESISTOR, CHIP 330 1/16W
R71	1-220-258-11	s	RESISTOR, CHIP 100 1/4W (3225)
R72	1-218-961-11	s	RESISTOR, CHIP 4.7K 1/16W
R73	1-220-230-11	s	RESISTOR CHIP 2.2 1/4W (3225)
R74	1-218-630-11	s	RESISTOR CHIP 220/1W (6332)
R75	1-218-630-11	s	RESISTOR CHIP 220/1W (6332)
R76	1-218-630-11	s	RESISTOR CHIP 220/1W (6332)
R77	1-218-630-11	s	RESISTOR CHIP 220/1W (6332)
R78	1-218-630-11	s	RESISTOR CHIP 220/1W (6332)
R79	1-218-630-11	s	RESISTOR CHIP 220/1W (6332)
R80	1-218-630-11	s	RESISTOR CHIP 220/1W (6332)
R81	1-218-630-11	s	RESISTOR CHIP 220/1W (6332)
R86	1-218-477-11	s	RESISTOR CHIP 220 1/4W (3225)
R94	1-218-947-11	s	RESISTOR, CHIP 330 1/16W

(CN-2393 BOARD)

Ref. No. or Q'ty	Part No.	SP	Description
R201	1-208-643-11	s	RESISTOR CHIP 22 1/16W (1005)
R202	1-208-643-11	s	RESISTOR CHIP 22 1/16W (1005)
R203	1-208-643-11	s	RESISTOR CHIP 22 1/16W (1005)
R204	1-208-643-11	s	RESISTOR CHIP 22 1/16W (1005)
R205	1-208-643-11	s	RESISTOR CHIP 22 1/16W (1005)
R206	1-208-643-11	s	RESISTOR CHIP 22 1/16W (1005)
R207	1-208-643-11	s	RESISTOR CHIP 22 1/16W (1005)
R208	1-208-643-11	s	RESISTOR CHIP 22 1/16W (1005)
R209	1-208-643-11	s	RESISTOR CHIP 22 1/16W (1005)
R210	1-208-643-11	s	RESISTOR CHIP 22 1/16W (1005)
R211	1-208-643-11	s	RESISTOR CHIP 22 1/16W (1005)
R212	1-208-643-11	s	RESISTOR CHIP 22 1/16W (1005)
R213	1-208-643-11	s	RESISTOR CHIP 22 1/16W (1005)
R214	1-208-643-11	s	RESISTOR CHIP 22 1/16W (1005)
R215	1-208-643-11	s	RESISTOR CHIP 22 1/16W (1005)
R216	1-208-643-11	s	RESISTOR CHIP 22 1/16W (1005)
R217	1-208-643-11	s	RESISTOR CHIP 22 1/16W (1005)
R218	1-208-643-11	s	RESISTOR CHIP 22 1/16W (1005)
R219	1-208-643-11	s	RESISTOR CHIP 22 1/16W (1005)
R220	1-208-643-11	s	RESISTOR CHIP 22 1/16W (1005)
R221	1-208-643-11	s	RESISTOR CHIP 22 1/16W (1005)
R222	1-208-643-11	s	RESISTOR CHIP 22 1/16W (1005)
R223	1-208-643-11	s	RESISTOR CHIP 22 1/16W (1005)
R224	1-208-643-11	s	RESISTOR CHIP 22 1/16W (1005)
R225	1-208-643-11	s	RESISTOR CHIP 22 1/16W (1005)
R226	1-208-643-11	s	RESISTOR CHIP 22 1/16W (1005)
R227	1-208-643-11	s	RESISTOR CHIP 22 1/16W (1005)
R228	1-208-643-11	s	RESISTOR CHIP 22 1/16W (1005)
R229	1-208-643-11	s	RESISTOR CHIP 22 1/16W (1005)
R230	1-208-643-11	s	RESISTOR CHIP 22 1/16W (1005)
R231	1-208-643-11	s	RESISTOR CHIP 22 1/16W (1005)
R232	1-208-643-11	s	RESISTOR CHIP 22 1/16W (1005)
R301	1-218-947-11	s	RESISTOR, CHIP 330 1/16W
R302	1-208-643-11	s	RESISTOR CHIP 22 1/16W (1005)
R303	1-208-643-11	s	RESISTOR CHIP 22 1/16W (1005)
R304	1-208-643-11	s	RESISTOR CHIP 22 1/16W (1005)
R305	1-208-643-11	s	RESISTOR CHIP 22 1/16W (1005)
R306	1-208-643-11	s	RESISTOR CHIP 22 1/16W (1005)
R307	1-208-643-11	s	RESISTOR CHIP 22 1/16W (1005)
R308	1-208-643-11	s	RESISTOR CHIP 22 1/16W (1005)
R309	1-208-643-11	s	RESISTOR CHIP 22 1/16W (1005)
R310	1-208-643-11	s	RESISTOR CHIP 22 1/16W (1005)
R311	1-208-643-11	s	RESISTOR CHIP 22 1/16W (1005)
R312	1-208-643-11	s	RESISTOR CHIP 22 1/16W (1005)
R313	1-208-643-11	s	RESISTOR CHIP 22 1/16W (1005)
R314	1-208-643-11	s	RESISTOR CHIP 22 1/16W (1005)
R315	1-208-643-11	s	RESISTOR CHIP 22 1/16W (1005)
R316	1-208-643-11	s	RESISTOR CHIP 22 1/16W (1005)
R317	1-208-643-11	s	RESISTOR CHIP 22 1/16W (1005)
R318	1-208-643-11	s	RESISTOR CHIP 22 1/16W (1005)
R319	1-208-643-11	s	RESISTOR CHIP 22 1/16W (1005)
R320	1-208-643-11	s	RESISTOR CHIP 22 1/16W (1005)
R321	1-218-961-11	s	RESISTOR, CHIP 4.7K 1/16W
R322	1-218-961-11	s	RESISTOR, CHIP 4.7K 1/16W
R323	1-218-947-11	s	RESISTOR, CHIP 330 1/16W
R324	1-218-947-11	s	RESISTOR, CHIP 330 1/16W
R325	1-218-973-11	s	RESISTOR,CHIP 47K 1/16W (1005)
R326	1-218-973-11	s	RESISTOR,CHIP 47K 1/16W (1005)
R328	1-218-947-11	s	RESISTOR, CHIP 330 1/16W

(CN-2393 BOARD)

Ref. No. or Q'ty	Part No.	SP	Description
R330	1-218-990-11	s	RESISTOR,CHIP 0 1/16W (1005)
R331	1-208-643-11	s	RESISTOR CHIP 22 1/16W (1005)
R332	1-208-643-11	s	RESISTOR CHIP 22 1/16W (1005)
R333	1-218-961-11	s	RESISTOR, CHIP 4.7K 1/16W
R334	1-218-961-11	s	RESISTOR, CHIP 4.7K 1/16W
R335	1-218-947-11	s	RESISTOR, CHIP 330 1/16W
R336	1-218-947-11	s	RESISTOR, CHIP 330 1/16W
R337	1-218-973-11	s	RESISTOR,CHIP 47K 1/16W (1005)
R339	1-218-947-11	s	RESISTOR, CHIP 330 1/16W
R340	1-218-990-11	s	RESISTOR,CHIP 0 1/16W (1005)
RB201	1-234-380-11	s	RESISTOE,NETWORK 47KX4 (1005)
RB202	1-234-380-11	s	RESISTOE,NETWORK 47KX4 (1005)
RB203	1-234-380-11	s	RESISTOE,NETWORK 47KX4 (1005)
RB204	1-234-380-11	s	RESISTOE,NETWORK 47KX4 (1005)
RB205	1-234-380-11	s	RESISTOE,NETWORK 47KX4 (1005)
RB206	1-234-380-11	s	RESISTOE,NETWORK 47KX4 (1005)
RB207	1-234-380-11	s	RESISTOE,NETWORK 47KX4 (1005)
RB208	1-234-380-11	s	RESISTOE,NETWORK 47KX4 (1005)
RB301	1-234-380-11	s	RESISTOE,NETWORK 47KX4 (1005)
RB302	1-234-380-11	s	RESISTOE,NETWORK 47KX4 (1005)
RB303	1-234-380-11	s	RESISTOE,NETWORK 47KX4 (1005)
RB304	1-234-380-11	s	RESISTOE,NETWORK 47KX4 (1005)
RB305	1-234-380-11	s	RESISTOE,NETWORK 47KX4 (1005)
RB306	1-234-380-11	s	RESISTOE,NETWORK 47KX4 (1005)
THP1	1-533-817-21	s	THERMISTOR
THP2	1-533-817-21	s	THERMISTOR
THP3	1-533-817-21	s	THERMISTOR
TP1	1-535-877-22	s	CHIP,CHECKER (TEST POINT)
TP2	1-535-877-22	s	CHIP,CHECKER (TEST POINT)
TP4	1-535-877-22	s	CHIP,CHECKER (TEST POINT)
TP5	1-535-877-22	s	CHIP,CHECKER (TEST POINT)
TP6	1-535-877-22	s	CHIP,CHECKER (TEST POINT)
TP7	1-535-877-22	s	CHIP,CHECKER (TEST POINT)
TP8	1-535-877-22	s	CHIP,CHECKER (TEST POINT)
VDR1	1-801-922-11	s	VARISTOR, CHIP
VDR2	1-801-922-11	s	VARISTOR, CHIP
VDR3	1-801-922-11	s	VARISTOR, CHIP
VDR4	1-801-922-11	s	VARISTOR, CHIP
VDR6	1-803-974-11	s	VARISTOR, CHIP
VDR7	1-801-922-11	s	VARISTOR, CHIP
VDR8	1-801-922-11	s	VARISTOR, CHIP
VDR301	1-801-922-11	s	VARISTOR, CHIP
VDR302	1-801-922-11	s	VARISTOR, CHIP
VDR303	1-803-974-11	s	VARISTOR, CHIP
VDR304	1-803-974-11	s	VARISTOR, CHIP
VDR305	1-801-922-11	s	VARISTOR, CHIP
VDR306	1-801-922-11	s	VARISTOR, CHIP
VDR307	1-803-974-11	s	VARISTOR, CHIP

CPU-347 BOARD

Ref. No. or Q'ty	Part No.	SP	Description
C201	1-125-777-11	s	CAPACITOR CERAMIC 0.1MF/10V
C203	1-125-777-11	s	CAPACITOR CERAMIC 0.1MF/10V
C205	1-125-777-11	s	CAPACITOR CERAMIC 0.1MF/10V
C206	1-164-937-11	s	CAPACITOR,CHIP CERAMIC 1000PF
C207	1-125-777-11	s	CAPACITOR CERAMIC 0.1MF/10V
C208	1-164-937-11	s	CAPACITOR,CHIP CERAMIC 1000PF
C209	1-125-777-11	s	CAPACITOR CERAMIC 0.1MF/10V
C210	1-164-937-11	s	CAPACITOR,CHIP CERAMIC 1000PF
C211	1-164-937-11	s	CAPACITOR,CHIP CERAMIC 1000PF
C212	1-164-937-11	s	CAPACITOR,CHIP CERAMIC 1000PF
C213	1-127-820-11	s	CAPACITOR, SQUARE CHIP 4.7MF
C215	1-127-820-11	s	CAPACITOR, SQUARE CHIP 4.7MF
C217	1-127-820-11	s	CAPACITOR, SQUARE CHIP 4.7MF
C301	1-127-820-11	s	CAPACITOR, SQUARE CHIP 4.7MF
C302	1-127-820-11	s	CAPACITOR, SQUARE CHIP 4.7MF
C303	1-127-820-11	s	CAPACITOR, SQUARE CHIP 4.7MF
C304	1-127-820-11	s	CAPACITOR, SQUARE CHIP 4.7MF
C305	1-107-826-11	s	CAPACITOR,CHIP CERAMIC 0.1MF
C306	1-107-826-11	s	CAPACITOR,CHIP CERAMIC 0.1MF
C307	1-164-943-11	s	CAPACITOR,CHIP CERAMIC 0.01MF
C308	1-164-943-11	s	CAPACITOR,CHIP CERAMIC 0.01MF
C309	1-127-573-11	s	CAPACITOR,CERAMIC 1MFB(2012)
C310	1-127-573-11	s	CAPACITOR,CERAMIC 1MFB(2012)
C311	1-107-826-11	s	CAPACITOR,CHIP CERAMIC 0.1MF
C312	1-107-826-11	s	CAPACITOR,CHIP CERAMIC 0.1MF
C313	1-164-943-11	s	CAPACITOR,CHIP CERAMIC 0.01MF
C314	1-164-943-11	s	CAPACITOR,CHIP CERAMIC 0.01MF
C315	1-127-573-11	s	CAPACITOR,CERAMIC 1MFB(2012)
C316	1-107-826-11	s	CAPACITOR,CHIP CERAMIC 0.1MF
C317	1-164-943-11	s	CAPACITOR,CHIP CERAMIC 0.01MF
C318	1-164-874-11	s	CAPACITOR,CHIP CERAMIC 100PF
C319	1-127-820-11	s	CAPACITOR, SQUARE CHIP 4.7MF
C320	1-127-820-11	s	CAPACITOR, SQUARE CHIP 4.7MF
C321	1-127-820-11	s	CAPACITOR, SQUARE CHIP 4.7MF
C322	1-127-820-11	s	CAPACITOR, SQUARE CHIP 4.7MF
C323	1-107-826-11	s	CAPACITOR,CHIP CERAMIC 0.1MF
C324	1-107-826-11	s	CAPACITOR,CHIP CERAMIC 0.1MF
C325	1-164-943-11	s	CAPACITOR,CHIP CERAMIC 0.01MF
C326	1-164-943-11	s	CAPACITOR,CHIP CERAMIC 0.01MF
C327	1-127-573-11	s	CAPACITOR,CERAMIC 1MFB(2012)
C328	1-127-573-11	s	CAPACITOR,CERAMIC 1MFB(2012)
C329	1-107-826-11	s	CAPACITOR,CHIP CERAMIC 0.1MF
C330	1-107-826-11	s	CAPACITOR,CHIP CERAMIC 0.1MF
C331	1-164-943-11	s	CAPACITOR,CHIP CERAMIC 0.01MF
C332	1-164-943-11	s	CAPACITOR,CHIP CERAMIC 0.01MF
C333	1-127-573-11	s	CAPACITOR,CERAMIC 1MFB(2012)
C334	1-107-826-11	s	CAPACITOR,CHIP CERAMIC 0.1MF
C335	1-164-943-11	s	CAPACITOR,CHIP CERAMIC 0.01MF
C337	1-164-943-11	s	CAPACITOR,CHIP CERAMIC 0.01MF
C338	1-164-943-11	s	CAPACITOR,CHIP CERAMIC 0.01MF
C339	1-164-943-11	s	CAPACITOR,CHIP CERAMIC 0.01MF
C340	1-164-943-11	s	CAPACITOR,CHIP CERAMIC 0.01MF
C341	1-164-874-11	s	CAPACITOR,CHIP CERAMIC 100PF
C400	1-126-396-11	s	CAPACITOR,ELECT 47MF/16V(CHIP)
C401	1-126-396-11	s	CAPACITOR,ELECT 47MF/16V(CHIP)
C402	1-107-826-11	s	CAPACITOR,CHIP CERAMIC 0.1MF
C403	1-107-826-11	s	CAPACITOR,CHIP CERAMIC 0.1MF
C404	1-164-937-11	s	CAPACITOR,CHIP CERAMIC 1000PF
C405	1-164-937-11	s	CAPACITOR,CHIP CERAMIC 1000PF

(CPU-347 BOARD)

Ref. No. or Q'ty	Part No.	SP	Description
C406	1-127-820-11	s	CAPACITOR, SQUARE CHIP 4.7MF
C407	1-127-820-11	s	CAPACITOR, SQUARE CHIP 4.7MF
C408	1-107-826-11	s	CAPACITOR,CHIP CERAMIC 0.1MF
C409	1-107-826-11	s	CAPACITOR,CHIP CERAMIC 0.1MF
C410	1-164-937-11	s	CAPACITOR,CHIP CERAMIC 1000PF
C411	1-164-937-11	s	CAPACITOR,CHIP CERAMIC 1000PF
C412	1-127-820-11	s	CAPACITOR, SQUARE CHIP 4.7MF
C413	1-127-820-11	s	CAPACITOR, SQUARE CHIP 4.7MF
C414	1-107-826-11	s	CAPACITOR,CHIP CERAMIC 0.1MF
C415	1-107-826-11	s	CAPACITOR,CHIP CERAMIC 0.1MF
C416	1-164-937-11	s	CAPACITOR,CHIP CERAMIC 1000PF
C417	1-164-937-11	s	CAPACITOR,CHIP CERAMIC 1000PF
C418	1-127-820-11	s	CAPACITOR, SQUARE CHIP 4.7MF
C419	1-127-820-11	s	CAPACITOR, SQUARE CHIP 4.7MF
C420	1-107-826-11	s	CAPACITOR,CHIP CERAMIC 0.1MF
C421	1-107-826-11	s	CAPACITOR,CHIP CERAMIC 0.1MF
C422	1-164-937-11	s	CAPACITOR,CHIP CERAMIC 1000PF
C423	1-164-937-11	s	CAPACITOR,CHIP CERAMIC 1000PF
C424	1-127-820-11	s	CAPACITOR, SQUARE CHIP 4.7MF
C425	1-127-820-11	s	CAPACITOR, SQUARE CHIP 4.7MF
C426	1-107-826-11	s	CAPACITOR,CHIP CERAMIC 0.1MF
C428	1-164-937-11	s	CAPACITOR,CHIP CERAMIC 1000PF
C429	1-164-937-11	s	CAPACITOR,CHIP CERAMIC 1000PF
C430	1-164-874-11	s	CAPACITOR,CHIP CERAMIC 100PF
C431	1-107-826-11	s	CAPACITOR,CHIP CERAMIC 0.1MF
C432	1-107-826-11	s	CAPACITOR,CHIP CERAMIC 0.1MF
C433	1-127-820-11	s	CAPACITOR, SQUARE CHIP 4.7MF
C435	1-127-820-11	s	CAPACITOR, SQUARE CHIP 4.7MF
C437	1-164-937-11	s	CAPACITOR,CHIP CERAMIC 1000PF
C439	1-164-937-11	s	CAPACITOR,CHIP CERAMIC 1000PF
C441	1-127-573-11	s	CAPACITOR,CERAMIC 1MFB(2012)
C443	1-107-826-11	s	CAPACITOR,CHIP CERAMIC 0.1MF
C445	1-164-937-11	s	CAPACITOR,CHIP CERAMIC 1000PF
C447	1-127-573-11	s	CAPACITOR,CERAMIC 1MFB(2012)
C449	1-107-826-11	s	CAPACITOR,CHIP CERAMIC 0.1MF
C451	1-164-937-11	s	CAPACITOR,CHIP CERAMIC 1000PF
C453	1-127-573-11	s	CAPACITOR,CERAMIC 1MFB(2012)
C455	1-107-826-11	s	CAPACITOR,CHIP CERAMIC 0.1MF
C457	1-164-937-11	s	CAPACITOR,CHIP CERAMIC 1000PF
C459	1-107-826-11	s	CAPACITOR,CHIP CERAMIC 0.1MF
C460	1-164-937-11	s	CAPACITOR,CHIP CERAMIC 1000PF
C461	1-107-826-11	s	CAPACITOR,CHIP CERAMIC 0.1MF
C462	1-164-937-11	s	CAPACITOR,CHIP CERAMIC 1000PF
C463	1-164-937-11	s	CAPACITOR,CHIP CERAMIC 1000PF
C464	1-164-937-11	s	CAPACITOR,CHIP CERAMIC 1000PF
C465	1-164-937-11	s	CAPACITOR,CHIP CERAMIC 1000PF
C466	1-164-937-11	s	CAPACITOR,CHIP CERAMIC 1000PF
C467	1-164-937-11	s	CAPACITOR,CHIP CERAMIC 1000PF
C468	1-164-937-11	s	CAPACITOR,CHIP CERAMIC 1000PF
C500	1-126-396-11	s	CAPACITOR,ELECT 47MF/16V(CHIP)
C501	1-126-396-11	s	CAPACITOR,ELECT 47MF/16V(CHIP)
C502	1-107-826-11	s	CAPACITOR,CHIP CERAMIC 0.1MF
C503	1-107-826-11	s	CAPACITOR,CHIP CERAMIC 0.1MF
C504	1-164-937-11	s	CAPACITOR,CHIP CERAMIC 1000PF
C505	1-164-937-11	s	CAPACITOR,CHIP CERAMIC 1000PF
C506	1-127-820-11	s	CAPACITOR, SQUARE CHIP 4.7MF
C507	1-127-820-11	s	CAPACITOR, SQUARE CHIP 4.7MF
C508	1-107-826-11	s	CAPACITOR,CHIP CERAMIC 0.1MF
C509	1-107-826-11	s	CAPACITOR,CHIP CERAMIC 0.1MF

(CPU-347 BOARD)

Ref. No. or Q'ty	Part No.	SP	Description
C510	1-164-937-11	s	CAPACITOR,CHIP CERAMIC 1000PF
C511	1-164-937-11	s	CAPACITOR,CHIP CERAMIC 1000PF
C512	1-127-820-11	s	CAPACITOR, SQUARE CHIP 4.7MF
C513	1-127-820-11	s	CAPACITOR, SQUARE CHIP 4.7MF
C514	1-107-826-11	s	CAPACITOR,CHIP CERAMIC 0.1MF
C515	1-107-826-11	s	CAPACITOR,CHIP CERAMIC 0.1MF
C516	1-164-937-11	s	CAPACITOR,CHIP CERAMIC 1000PF
C517	1-164-937-11	s	CAPACITOR,CHIP CERAMIC 1000PF
C518	1-127-820-11	s	CAPACITOR, SQUARE CHIP 4.7MF
C519	1-127-820-11	s	CAPACITOR, SQUARE CHIP 4.7MF
C520	1-107-826-11	s	CAPACITOR,CHIP CERAMIC 0.1MF
C521	1-107-826-11	s	CAPACITOR,CHIP CERAMIC 0.1MF
C522	1-164-937-11	s	CAPACITOR,CHIP CERAMIC 1000PF
C523	1-164-937-11	s	CAPACITOR,CHIP CERAMIC 1000PF
C524	1-127-820-11	s	CAPACITOR, SQUARE CHIP 4.7MF
C525	1-127-820-11	s	CAPACITOR, SQUARE CHIP 4.7MF
C526	1-107-826-11	s	CAPACITOR,CHIP CERAMIC 0.1MF
C528	1-164-937-11	s	CAPACITOR,CHIP CERAMIC 1000PF
C529	1-164-937-11	s	CAPACITOR,CHIP CERAMIC 1000PF
C530	1-164-874-11	s	CAPACITOR,CHIP CERAMIC 100PF
C531	1-107-826-11	s	CAPACITOR,CHIP CERAMIC 0.1MF
C532	1-107-826-11	s	CAPACITOR,CHIP CERAMIC 0.1MF
C533	1-127-820-11	s	CAPACITOR, SQUARE CHIP 4.7MF
C534	1-127-820-11	s	CAPACITOR, SQUARE CHIP 4.7MF
C535	1-127-820-11	s	CAPACITOR, SQUARE CHIP 4.7MF
C536	1-127-820-11	s	CAPACITOR, SQUARE CHIP 4.7MF
C537	1-164-937-11	s	CAPACITOR,CHIP CERAMIC 1000PF
C538	1-164-937-11	s	CAPACITOR,CHIP CERAMIC 1000PF
C539	1-164-937-11	s	CAPACITOR,CHIP CERAMIC 1000PF
C540	1-164-937-11	s	CAPACITOR,CHIP CERAMIC 1000PF
C541	1-127-573-11	s	CAPACITOR,CERAMIC 1MFB(2012)
C542	1-127-573-11	s	CAPACITOR,CERAMIC 1MFB(2012)
C543	1-107-826-11	s	CAPACITOR,CHIP CERAMIC 0.1MF
C544	1-107-826-11	s	CAPACITOR,CHIP CERAMIC 0.1MF
C545	1-164-937-11	s	CAPACITOR,CHIP CERAMIC 1000PF
C546	1-164-937-11	s	CAPACITOR,CHIP CERAMIC 1000PF
C547	1-127-573-11	s	CAPACITOR,CERAMIC 1MFB(2012)
C548	1-127-573-11	s	CAPACITOR,CERAMIC 1MFB(2012)
C549	1-107-826-11	s	CAPACITOR,CHIP CERAMIC 0.1MF
C550	1-107-826-11	s	CAPACITOR,CHIP CERAMIC 0.1MF
C551	1-164-937-11	s	CAPACITOR,CHIP CERAMIC 1000PF
C552	1-164-937-11	s	CAPACITOR,CHIP CERAMIC 1000PF
C553	1-127-573-11	s	CAPACITOR,CERAMIC 1MFB(2012)
C554	1-127-573-11	s	CAPACITOR,CERAMIC 1MFB(2012)
C555	1-107-826-11	s	CAPACITOR,CHIP CERAMIC 0.1MF
C556	1-107-826-11	s	CAPACITOR,CHIP CERAMIC 0.1MF
C557	1-164-937-11	s	CAPACITOR,CHIP CERAMIC 1000PF
C558	1-164-937-11	s	CAPACITOR,CHIP CERAMIC 1000PF
C559	1-164-937-11	s	CAPACITOR,CHIP CERAMIC 1000PF
C560	1-164-937-11	s	CAPACITOR,CHIP CERAMIC 1000PF
C561	1-164-937-11	s	CAPACITOR,CHIP CERAMIC 1000PF
C562	1-164-937-11	s	CAPACITOR,CHIP CERAMIC 1000PF
C563	1-164-937-11	s	CAPACITOR,CHIP CERAMIC 1000PF
C564	1-164-937-11	s	CAPACITOR,CHIP CERAMIC 1000PF
C600	1-126-396-11	s	CAPACITOR,ELECT 47MF/16V(CHIP)
C601	1-126-396-11	s	CAPACITOR,ELECT 47MF/16V(CHIP)
C602	1-107-826-11	s	CAPACITOR,CHIP CERAMIC 0.1MF
C603	1-107-826-11	s	CAPACITOR,CHIP CERAMIC 0.1MF
C604	1-164-937-11	s	CAPACITOR,CHIP CERAMIC 1000PF

(CPU-347 BOARD)

Ref. No. or Q'ty	Part No.	SP	Description
C605	1-164-937-11	s	CAPACITOR,CHIP CERAMIC 1000PF
C606	1-127-820-11	s	CAPACITOR, SQUARE CHIP 4.7MF
C607	1-127-820-11	s	CAPACITOR, SQUARE CHIP 4.7MF
C608	1-107-826-11	s	CAPACITOR,CHIP CERAMIC 0.1MF
C609	1-107-826-11	s	CAPACITOR,CHIP CERAMIC 0.1MF
C610	1-164-937-11	s	CAPACITOR,CHIP CERAMIC 1000PF
C611	1-164-937-11	s	CAPACITOR,CHIP CERAMIC 1000PF
C612	1-127-820-11	s	CAPACITOR, SQUARE CHIP 4.7MF
C613	1-127-820-11	s	CAPACITOR, SQUARE CHIP 4.7MF
C614	1-107-826-11	s	CAPACITOR,CHIP CERAMIC 0.1MF
C615	1-107-826-11	s	CAPACITOR,CHIP CERAMIC 0.1MF
C616	1-164-937-11	s	CAPACITOR,CHIP CERAMIC 1000PF
C617	1-164-937-11	s	CAPACITOR,CHIP CERAMIC 1000PF
C618	1-127-820-11	s	CAPACITOR, SQUARE CHIP 4.7MF
C619	1-127-820-11	s	CAPACITOR, SQUARE CHIP 4.7MF
C620	1-107-826-11	s	CAPACITOR,CHIP CERAMIC 0.1MF
C621	1-107-826-11	s	CAPACITOR,CHIP CERAMIC 0.1MF
C622	1-164-937-11	s	CAPACITOR,CHIP CERAMIC 1000PF
C623	1-164-937-11	s	CAPACITOR,CHIP CERAMIC 1000PF
C624	1-127-820-11	s	CAPACITOR, SQUARE CHIP 4.7MF
C625	1-127-820-11	s	CAPACITOR, SQUARE CHIP 4.7MF
C626	1-107-826-11	s	CAPACITOR,CHIP CERAMIC 0.1MF
C628	1-164-937-11	s	CAPACITOR,CHIP CERAMIC 1000PF
C629	1-164-937-11	s	CAPACITOR,CHIP CERAMIC 1000PF
C630	1-164-874-11	s	CAPACITOR,CHIP CERAMIC 100PF
C631	1-107-826-11	s	CAPACITOR,CHIP CERAMIC 0.1MF
C632	1-107-826-11	s	CAPACITOR,CHIP CERAMIC 0.1MF
C633	1-127-820-11	s	CAPACITOR, SQUARE CHIP 4.7MF
C634	1-127-820-11	s	CAPACITOR, SQUARE CHIP 4.7MF
C635	1-127-820-11	s	CAPACITOR, SQUARE CHIP 4.7MF
C636	1-127-820-11	s	CAPACITOR, SQUARE CHIP 4.7MF
C637	1-164-937-11	s	CAPACITOR,CHIP CERAMIC 1000PF
C638	1-164-937-11	s	CAPACITOR,CHIP CERAMIC 1000PF
C639	1-164-937-11	s	CAPACITOR,CHIP CERAMIC 1000PF
C640	1-164-937-11	s	CAPACITOR,CHIP CERAMIC 1000PF
C641	1-127-573-11	s	CAPACITOR,CERAMIC 1MFB(2012)
C642	1-127-573-11	s	CAPACITOR,CERAMIC 1MFB(2012)
C643	1-107-826-11	s	CAPACITOR,CHIP CERAMIC 0.1MF
C644	1-107-826-11	s	CAPACITOR,CHIP CERAMIC 0.1MF
C645	1-164-937-11	s	CAPACITOR,CHIP CERAMIC 1000PF
C646	1-164-937-11	s	CAPACITOR,CHIP CERAMIC 1000PF
C647	1-127-573-11	s	CAPACITOR,CERAMIC 1MFB(2012)
C648	1-127-573-11	s	CAPACITOR,CERAMIC 1MFB(2012)
C649	1-107-826-11	s	CAPACITOR,CHIP CERAMIC 0.1MF
C650	1-107-826-11	s	CAPACITOR,CHIP CERAMIC 0.1MF
C651	1-164-937-11	s	CAPACITOR,CHIP CERAMIC 1000PF
C652	1-164-937-11	s	CAPACITOR,CHIP CERAMIC 1000PF
C653	1-127-573-11	s	CAPACITOR,CERAMIC 1MFB(2012)
C654	1-127-573-11	s	CAPACITOR,CERAMIC 1MFB(2012)
C655	1-107-826-11	s	CAPACITOR,CHIP CERAMIC 0.1MF
C656	1-107-826-11	s	CAPACITOR,CHIP CERAMIC 0.1MF
C657	1-164-937-11	s	CAPACITOR,CHIP CERAMIC 1000PF
C658	1-164-937-11	s	CAPACITOR,CHIP CERAMIC 1000PF
C659	1-164-937-11	s	CAPACITOR,CHIP CERAMIC 1000PF
C660	1-164-937-11	s	CAPACITOR,CHIP CERAMIC 1000PF
C661	1-164-937-11	s	CAPACITOR,CHIP CERAMIC 1000PF
C662	1-164-937-11	s	CAPACITOR,CHIP CERAMIC 1000PF
C663	1-164-937-11	s	CAPACITOR,CHIP CERAMIC 1000PF
C664	1-164-937-11	s	CAPACITOR,CHIP CERAMIC 1000PF

(CPU-347 BOARD)

Ref. No. or Q'ty	Part No.	SP	Description
C703	1-126-396-11	s	CAPACITOR,ELECT 47MF/16V(CHIP)
C704	1-107-826-11	s	CAPACITOR,CHIP CERAMIC 0.1MF
C705	1-164-943-11	s	CAPACITOR,CHIP CERAMIC 0.01MF
C706	1-127-820-11	s	CAPACITOR, SQUARE CHIP 4.7MF
C707	1-107-826-11	s	CAPACITOR,CHIP CERAMIC 0.1MF
C708	1-164-937-11	s	CAPACITOR,CHIP CERAMIC 1000PF
C709	1-107-826-11	s	CAPACITOR,CHIP CERAMIC 0.1MF
C710	1-164-943-11	s	CAPACITOR,CHIP CERAMIC 0.01MF
C711	1-127-820-11	s	CAPACITOR, SQUARE CHIP 4.7MF
C712	1-107-826-11	s	CAPACITOR,CHIP CERAMIC 0.1MF
C713	1-164-943-11	s	CAPACITOR,CHIP CERAMIC 0.01MF
C714	1-127-820-11	s	CAPACITOR, SQUARE CHIP 4.7MF
C715	1-107-826-11	s	CAPACITOR,CHIP CERAMIC 0.1MF
C716	1-164-943-11	s	CAPACITOR,CHIP CERAMIC 0.01MF
C717	1-164-874-11	s	CAPACITOR,CHIP CERAMIC 100PF
C718	1-164-943-11	s	CAPACITOR,CHIP CERAMIC 0.01MF
C719	1-164-943-11	s	CAPACITOR,CHIP CERAMIC 0.01MF
C720	1-164-943-11	s	CAPACITOR,CHIP CERAMIC 0.01MF
C721	1-164-943-11	s	CAPACITOR,CHIP CERAMIC 0.01MF
C722	1-164-943-11	s	CAPACITOR,CHIP CERAMIC 0.01MF
C723	1-164-943-11	s	CAPACITOR,CHIP CERAMIC 0.01MF
C724	1-164-943-11	s	CAPACITOR,CHIP CERAMIC 0.01MF
C725	1-164-943-11	s	CAPACITOR,CHIP CERAMIC 0.01MF
C726	1-164-937-11	s	CAPACITOR,CHIP CERAMIC 1000PF
C727	1-115-339-11	s	CAPACITOR,CERAMIC 0.1MF/50V
C801	1-164-937-11	s	CAPACITOR,CHIP CERAMIC 1000PF
C802	1-164-937-11	s	CAPACITOR,CHIP CERAMIC 1000PF
C803	1-107-826-11	s	CAPACITOR,CHIP CERAMIC 0.1MF
C804	1-107-826-11	s	CAPACITOR,CHIP CERAMIC 0.1MF
C805	1-127-573-11	s	CAPACITOR,CERAMIC 1MFB(2012)
C806	1-127-573-11	s	CAPACITOR,CERAMIC 1MFB(2012)
C807	1-164-943-11	s	CAPACITOR,CHIP CERAMIC 0.01MF
C808	1-164-943-11	s	CAPACITOR,CHIP CERAMIC 0.01MF
C809	1-164-937-11	s	CAPACITOR,CHIP CERAMIC 1000PF
C810	1-164-937-11	s	CAPACITOR,CHIP CERAMIC 1000PF
C811	1-107-826-11	s	CAPACITOR,CHIP CERAMIC 0.1MF
C812	1-107-826-11	s	CAPACITOR,CHIP CERAMIC 0.1MF
C813	1-127-573-11	s	CAPACITOR,CERAMIC 1MFB(2012)
C814	1-127-573-11	s	CAPACITOR,CERAMIC 1MFB(2012)
C815	1-164-943-11	s	CAPACITOR,CHIP CERAMIC 0.01MF
C816	1-164-943-11	s	CAPACITOR,CHIP CERAMIC 0.01MF
C901	1-164-937-11	s	CAPACITOR,CHIP CERAMIC 1000PF
C902	1-164-937-11	s	CAPACITOR,CHIP CERAMIC 1000PF
C903	1-164-937-11	s	CAPACITOR,CHIP CERAMIC 1000PF
C904	1-107-826-11	s	CAPACITOR,CHIP CERAMIC 0.1MF
C905	1-107-826-11	s	CAPACITOR,CHIP CERAMIC 0.1MF
C906	1-107-826-11	s	CAPACITOR,CHIP CERAMIC 0.1MF
C907	1-127-573-11	s	CAPACITOR,CERAMIC 1MFB(2012)
C908	1-127-573-11	s	CAPACITOR,CERAMIC 1MFB(2012)
C909	1-127-573-11	s	CAPACITOR,CERAMIC 1MFB(2012)
C910	1-164-943-11	s	CAPACITOR,CHIP CERAMIC 0.01MF
C911	1-164-943-11	s	CAPACITOR,CHIP CERAMIC 0.01MF
C912	1-164-943-11	s	CAPACITOR,CHIP CERAMIC 0.01MF
C913	1-164-937-11	s	CAPACITOR,CHIP CERAMIC 1000PF
C914	1-164-937-11	s	CAPACITOR,CHIP CERAMIC 1000PF
C916	1-107-826-11	s	CAPACITOR,CHIP CERAMIC 0.1MF
C917	1-107-826-11	s	CAPACITOR,CHIP CERAMIC 0.1MF
C919	1-107-826-11	s	CAPACITOR,CHIP CERAMIC 0.1MF
C920	1-107-826-11	s	CAPACITOR,CHIP CERAMIC 0.1MF

(CPU-347 BOARD)

Ref. No. or Q'ty	Part No.	SP	Description
C921	1-164-937-11	s	CAPACITOR,CHIP CERAMIC 1000PF
C922	1-164-937-11	s	CAPACITOR,CHIP CERAMIC 1000PF
C923	1-125-777-11	s	CAPACITOR CERAMIC 0.1MF/10V
C924	1-125-777-11	s	CAPACITOR CERAMIC 0.1MF/10V
C925	1-125-777-11	s	CAPACITOR CERAMIC 0.1MF/10V
C927	1-164-943-11	s	CAPACITOR,CHIP CERAMIC 0.01MF
C928	1-127-573-11	s	CAPACITOR,CERAMIC 1MFB(2012)
C1001	1-126-396-11	s	CAPACITOR,ELECT 47MF/16V(CHIP)
C1002	1-127-820-11	s	CAPACITOR, SQUARE CHIP 4.7MF
C1003	1-127-820-11	s	CAPACITOR, SQUARE CHIP 4.7MF
C1004	1-127-820-11	s	CAPACITOR, SQUARE CHIP 4.7MF
C1005	1-127-820-11	s	CAPACITOR, SQUARE CHIP 4.7MF
C1006	1-127-820-11	s	CAPACITOR, SQUARE CHIP 4.7MF
C1007	1-104-607-11	s	CAPACITOR ELECT 47MF/16V(105C)
C1008	1-127-820-11	s	CAPACITOR, SQUARE CHIP 4.7MF
C1009	1-127-820-11	s	CAPACITOR, SQUARE CHIP 4.7MF
C1010	1-128-416-11	s	CAPACITOR ELECT 100MF/16V(105C
C1011	1-128-416-11	s	CAPACITOR ELECT 100MF/16V(105C
C1012	1-127-820-11	s	CAPACITOR, SQUARE CHIP 4.7MF
C1013	1-127-820-11	s	CAPACITOR, SQUARE CHIP 4.7MF
C1014	1-127-820-11	s	CAPACITOR, SQUARE CHIP 4.7MF
C1015	1-164-943-11	s	CAPACITOR,CHIP CERAMIC 0.01MF
C1016	1-164-943-11	s	CAPACITOR,CHIP CERAMIC 0.01MF
C1017	1-164-874-11	s	CAPACITOR,CHIP CERAMIC 100PF
C1018	1-164-874-11	s	CAPACITOR,CHIP CERAMIC 100PF
C1019	1-127-573-11	s	CAPACITOR,CERAMIC 1MFB(2012)
C1020	1-104-607-11	s	CAPACITOR ELECT 47MF/16V(105C)
C1021	1-127-820-11	s	CAPACITOR, SQUARE CHIP 4.7MF
C1023	1-127-820-11	s	CAPACITOR, SQUARE CHIP 4.7MF
C1024	1-125-777-11	s	CAPACITOR CERAMIC 0.1MF/10V
C1025	1-127-820-11	s	CAPACITOR, SQUARE CHIP 4.7MF
C1026	1-127-820-11	s	CAPACITOR, SQUARE CHIP 4.7MF
C1028	1-125-777-11	s	CAPACITOR CERAMIC 0.1MF/10V
C1029	1-125-777-11	s	CAPACITOR CERAMIC 0.1MF/10V
C1031	1-127-820-11	s	CAPACITOR, SQUARE CHIP 4.7MF
C1032	1-125-777-11	s	CAPACITOR CERAMIC 0.1MF/10V
C1033	1-125-777-11	s	CAPACITOR CERAMIC 0.1MF/10V
C1034	1-107-826-11	s	CAPACITOR,CHIP CERAMIC 0.1MF
C1035	1-164-943-11	s	CAPACITOR,CHIP CERAMIC 0.01MF
C1038	1-164-874-11	s	CAPACITOR,CHIP CERAMIC 100PF
C1101	1-107-826-11	s	CAPACITOR,CHIP CERAMIC 0.1MF
C1102	1-164-937-11	s	CAPACITOR,CHIP CERAMIC 1000PF
C1103	1-164-937-11	s	CAPACITOR,CHIP CERAMIC 1000PF
C1104	1-127-573-11	s	CAPACITOR,CERAMIC 1MFB(2012)
C1105	1-127-573-11	s	CAPACITOR,CERAMIC 1MFB(2012)
C1106	1-107-826-11	s	CAPACITOR,CHIP CERAMIC 0.1MF
C1108	1-164-874-11	s	CAPACITOR,CHIP CERAMIC 100PF
C1109	1-107-826-11	s	CAPACITOR,CHIP CERAMIC 0.1MF
C1110	1-107-826-11	s	CAPACITOR,CHIP CERAMIC 0.1MF
C1111	1-127-573-11	s	CAPACITOR,CERAMIC 1MFB(2012)
C1112	1-127-820-11	s	CAPACITOR, SQUARE CHIP 4.7MF
C1113	1-107-826-11	s	CAPACITOR,CHIP CERAMIC 0.1MF
CN801	1-815-231-11	s	CONNECTOR, FFC/FPC (ZIF) 40P
CN901	1-779-950-21	s	CONNECTOR, FFC/FPC (ZIF) 45P
CN1001	1-564-726-51	o	PIN, CONNECTOR (SMALL TYPE)10P
CN1002	1-573-360-21	s	CONNECTOR,FFC/FPC 20P
CN1101	1-580-055-21	o	PIN, CONNECTOR 2P
CN1102	1-580-056-21	s	PIN,CONNECTOR 3P

(CPU-347 BOARD)

Ref. No. or Q'ty	Part No.	SP	Description
D101	8-719-038-03	s	LED CL-190Y-CD-T
D102	8-719-037-96	s	LED CL-190G-CD
D1001	8-719-037-96	s	LED CL-190G-CD
D1101	8-719-071-34	s	DIODE RB521S-30-TE61
D1103	8-719-071-34	s	DIODE RB521S-30-TE61
E100	1-535-877-22	s	CHIP,CHECKER (TEST POINT)
E101	1-535-877-22	s	CHIP,CHECKER (TEST POINT)
E102	1-535-877-22	s	CHIP,CHECKER (TEST POINT)
E103	1-535-877-22	s	CHIP,CHECKER (TEST POINT)
FB300	1-469-324-21	s	FERRITE, EMI (SMD) 4.7UH
FB301	1-469-324-21	s	FERRITE, EMI (SMD) 4.7UH
FB302	1-469-324-21	s	FERRITE, EMI (SMD) 4.7UH
FB303	1-469-324-21	s	FERRITE, EMI (SMD) 4.7UH
FB400	1-469-324-21	s	FERRITE, EMI (SMD) 4.7UH
FB401	1-469-324-21	s	FERRITE, EMI (SMD) 4.7UH
FB402	1-400-162-21	s	FILTER, EMI
FB404	1-469-324-21	s	FERRITE, EMI (SMD) 4.7UH
FB500	1-469-324-21	s	FERRITE, EMI (SMD) 4.7UH
FB501	1-469-324-21	s	FERRITE, EMI (SMD) 4.7UH
FB502	1-400-162-21	s	FILTER, EMI
FB504	1-469-324-21	s	FERRITE, EMI (SMD) 4.7UH
FB505	1-469-324-21	s	FERRITE, EMI (SMD) 4.7UH
FB600	1-469-324-21	s	FERRITE, EMI (SMD) 4.7UH
FB601	1-469-324-21	s	FERRITE, EMI (SMD) 4.7UH
FB602	1-400-162-21	s	FILTER, EMI
FB604	1-469-324-21	s	FERRITE, EMI (SMD) 4.7UH
FB605	1-469-324-21	s	FERRITE, EMI (SMD) 4.7UH
FB701	1-469-324-21	s	FERRITE, EMI (SMD) 4.7UH
FB803	1-400-047-21	s	FERRITE, EMI (SMD) (1005)
FB804	1-400-047-21	s	FERRITE, EMI (SMD) (1005)
FB805	1-400-047-21	s	FERRITE, EMI (SMD) (1005)
FB806	1-400-047-21	s	FERRITE, EMI (SMD) (1005)
FB807	1-400-047-21	s	FERRITE, EMI (SMD) (1005)
FB808	1-400-047-21	s	FERRITE, EMI (SMD) (1005)
FB809	1-400-047-21	s	FERRITE, EMI (SMD) (1005)
FB810	1-400-047-21	s	FERRITE, EMI (SMD) (1005)
FB811	1-400-047-21	s	FERRITE, EMI (SMD) (1005)
FB812	1-400-047-21	s	FERRITE, EMI (SMD) (1005)
FB813	1-400-047-21	s	FERRITE, EMI (SMD) (1005)
FB814	1-400-047-21	s	FERRITE, EMI (SMD) (1005)
FB815	1-400-047-21	s	FERRITE, EMI (SMD) (1005)
FB816	1-400-047-21	s	FERRITE, EMI (SMD) (1005)
FB817	1-400-047-21	s	FERRITE, EMI (SMD) (1005)
FB818	1-400-047-21	s	FERRITE, EMI (SMD) (1005)
FB819	1-400-047-21	s	FERRITE, EMI (SMD) (1005)
FB820	1-400-047-21	s	FERRITE, EMI (SMD) (1005)
FB821	1-400-047-21	s	FERRITE, EMI (SMD) (1005)
FB822	1-400-047-21	s	FERRITE, EMI (SMD) (1005)
FB823	1-400-047-21	s	FERRITE, EMI (SMD) (1005)
FB824	1-400-047-21	s	FERRITE, EMI (SMD) (1005)
FB825	1-400-047-21	s	FERRITE, EMI (SMD) (1005)
FB826	1-400-047-21	s	FERRITE, EMI (SMD) (1005)
FB827	1-400-047-21	s	FERRITE, EMI (SMD) (1005)
FB828	1-400-047-21	s	FERRITE, EMI (SMD) (1005)
FB829	1-400-047-21	s	FERRITE, EMI (SMD) (1005)
FB830	1-400-047-21	s	FERRITE, EMI (SMD) (1005)
FB831	1-400-047-21	s	FERRITE, EMI (SMD) (1005)
FB832	1-400-047-21	s	FERRITE, EMI (SMD) (1005)
FB833	1-400-047-21	s	FERRITE, EMI (SMD) (1005)

(CPU-347 BOARD)

Ref. No. or Q'ty	Part No.	SP	Description
FB834	1-400-047-21	s	FERRITE, EMI (SMD) (1005)
FB903	1-400-162-21	s	FILTER, EMI
FB904	1-400-047-21	s	FERRITE, EMI (SMD) (1005)
FB905	1-400-047-21	s	FERRITE, EMI (SMD) (1005)
FB907	1-400-047-21	s	FERRITE, EMI (SMD) (1005)
FB908	1-400-047-21	s	FERRITE, EMI (SMD) (1005)
FB909	1-400-047-21	s	FERRITE, EMI (SMD) (1005)
FB910	1-400-047-21	s	FERRITE, EMI (SMD) (1005)
FB911	1-400-047-21	s	FERRITE, EMI (SMD) (1005)
FB912	1-400-162-21	s	FILTER, EMI
FB914	1-400-047-21	s	FERRITE, EMI (SMD) (1005)
FB915	1-400-047-21	s	FERRITE, EMI (SMD) (1005)
FB916	1-400-047-21	s	FERRITE, EMI (SMD) (1005)
FB918	1-400-047-21	s	FERRITE, EMI (SMD) (1005)
FB919	1-400-047-21	s	FERRITE, EMI (SMD) (1005)
FB920	1-400-047-21	s	FERRITE, EMI (SMD) (1005)
FB921	1-400-047-21	s	FERRITE, EMI (SMD) (1005)
FB922	1-400-047-21	s	FERRITE, EMI (SMD) (1005)
FB923	1-400-047-21	s	FERRITE, EMI (SMD) (1005)
FB924	1-400-047-21	s	FERRITE, EMI (SMD) (1005)
FB925	1-400-047-21	s	FERRITE, EMI (SMD) (1005)
FB926	1-400-047-21	s	FERRITE, EMI (SMD) (1005)
FB927	1-400-047-21	s	FERRITE, EMI (SMD) (1005)
FB928	1-400-047-21	s	FERRITE, EMI (SMD) (1005)
FB929	1-400-047-21	s	FERRITE, EMI (SMD) (1005)
FB930	1-400-047-21	s	FERRITE, EMI (SMD) (1005)
FB931	1-400-047-21	s	FERRITE, EMI (SMD) (1005)
FB932	1-400-047-21	s	FERRITE, EMI (SMD) (1005)
FB934	1-400-047-21	s	FERRITE, EMI (SMD) (1005)
FB935	1-400-047-21	s	FERRITE, EMI (SMD) (1005)
FB936	1-400-047-21	s	FERRITE, EMI (SMD) (1005)
FB937	1-400-047-21	s	FERRITE, EMI (SMD) (1005)
FB938	1-400-047-21	s	FERRITE, EMI (SMD) (1005)
FB939	1-400-162-21	s	FILTER, EMI
FB1001	1-469-324-21	s	FERRITE, EMI (SMD) 4.7UH
FB1002	1-469-324-21	s	FERRITE, EMI (SMD) 4.7UH
FB1003	1-469-324-21	s	FERRITE, EMI (SMD) 4.7UH
FB1004	1-469-324-21	s	FERRITE, EMI (SMD) 4.7UH
FB1005	1-469-324-21	s	FERRITE, EMI (SMD) 4.7UH
FB1006	1-469-324-21	s	FERRITE, EMI (SMD) 4.7UH
FB1101	1-469-324-21	s	FERRITE, EMI (SMD) 4.7UH
FB1102	1-469-324-21	s	FERRITE, EMI (SMD) 4.7UH
FL301	1-234-494-21	l	FILTER, EMI REMOVAL (SMD)
FL302	1-234-494-21	l	FILTER, EMI REMOVAL (SMD)
FL303	1-234-494-21	l	FILTER, EMI REMOVAL (SMD)
FL304	1-234-494-21	l	FILTER, EMI REMOVAL (SMD)
FL400	1-234-494-21	l	FILTER, EMI REMOVAL (SMD)
FL401	1-234-494-21	l	FILTER, EMI REMOVAL (SMD)
FL402	1-234-494-21	l	FILTER, EMI REMOVAL (SMD)
FL500	1-234-494-21	l	FILTER, EMI REMOVAL (SMD)
FL501	1-234-494-21	l	FILTER, EMI REMOVAL (SMD)
FL502	1-234-494-21	l	FILTER, EMI REMOVAL (SMD)
FL503	1-234-494-21	l	FILTER, EMI REMOVAL (SMD)
FL600	1-234-494-21	l	FILTER, EMI REMOVAL (SMD)
FL601	1-234-494-21	l	FILTER, EMI REMOVAL (SMD)
FL602	1-234-494-21	l	FILTER, EMI REMOVAL (SMD)
FL603	1-234-494-21	l	FILTER, EMI REMOVAL (SMD)
FL701	1-234-494-21	l	FILTER, EMI REMOVAL (SMD)

(CPU-347 BOARD)

Ref. No. or Q'ty	Part No.	SP	Description
IC202	8-759-392-77	s	IC SN74LVC245APW (E20)
IC203	8-759-679-53	s	IC SN74LVC244APWR
IC204	8-759-392-77	s	IC SN74LVC245APW (E20)
IC205	8-759-679-53	s	IC SN74LVC244APWR
IC206	8-759-679-53	s	IC SN74LVC244APWR
IC301	6-803-594-02	s	IC 7128BTC100-LPR5000A2V1.01
IC302	6-803-593-01	s	IC 7128BTC100-LPR5000A3V1.00
IC400	6-701-037-01	s	IC PM-44IX
IC403	8-759-679-53	s	IC SN74LVC244APWR
IC500	6-701-037-01	s	IC PM-44IX
IC600	6-701-037-01	s	IC PM-44IX
IC703	8-759-669-44	s	IC SN74LVC74APWR-12
IC704	6-703-524-01	s	IC P2010AF-08TR
IC705	6-803-547-01	s	IC CXD9181R
IC801	8-759-578-68	s	IC SN74LVCC4245APWR
IC802	8-759-578-68	s	IC SN74LVCC4245APWR
IC803	8-759-578-68	s	IC SN74LVCC4245APWR
IC804	8-759-578-68	s	IC SN74LVCC4245APWR
IC901	8-759-578-68	s	IC SN74LVCC4245APWR
IC902	8-759-578-68	s	IC SN74LVCC4245APWR
IC903	8-759-578-68	s	IC SN74LVCC4245APWR
IC905	8-759-578-68	s	IC SN74LVCC4245APWR
IC906	8-759-523-78	s	IC TC74VHC00FT(EL)
IC907	8-759-523-84	s	IC TC74VHC14FT (EL)
IC908	8-759-578-68	s	IC SN74LVCC4245APWR
IC910	8-759-549-14	s	IC SN74LV244APWR
IC1001	8-749-018-23	s	IC LT1764EQ-E2
IC1002	6-700-394-01	s	IC BA25BC0FP-TE2
IC1003	8-759-523-84	s	IC TC74VHC14FT (EL)
IC1004	8-759-523-79	s	IC TC74VHC02FT
IC1006	8-759-523-79	s	IC TC74VHC02FT
IC1007	8-759-523-78	s	IC TC74VHC00FT(EL)
IC1101	8-759-100-93	s	IC UPC393G2
IC1102	8-759-594-71	s	IC TC7SH14FU-TE85R
IC1103	8-759-523-78	s	IC TC74VHC00FT(EL)
LF1001	1-421-773-11	s	FILTER,NOISE REMOVAL
Q100	8-729-927-99	s	TRANSISTOR 2SC4617R
Q101	8-729-927-99	s	TRANSISTOR 2SC4617R
Q1001	8-729-927-99	s	TRANSISTOR 2SC4617R
Q1002	8-729-927-99	s	TRANSISTOR 2SC4617R
Q1101	8-729-929-08	s	TRANSISTOR DTC123JE
Q1102	8-729-047-32	s	TRANSISTOR SI4425DY-T1
R101	1-208-635-11	s	RESISTOR CHIP 10 1/16W (1005)
R102	1-208-635-11	s	RESISTOR CHIP 10 1/16W (1005)
R103	1-208-635-11	s	RESISTOR CHIP 10 1/16W (1005)
R104	1-208-635-11	s	RESISTOR CHIP 10 1/16W (1005)
R105	1-208-635-11	s	RESISTOR CHIP 10 1/16W (1005)
R106	1-208-635-11	s	RESISTOR CHIP 10 1/16W (1005)
R107	1-208-635-11	s	RESISTOR CHIP 10 1/16W (1005)
R108	1-208-635-11	s	RESISTOR CHIP 10 1/16W (1005)
R109	1-208-635-11	s	RESISTOR CHIP 10 1/16W (1005)
R110	1-208-635-11	s	RESISTOR CHIP 10 1/16W (1005)
R111	1-208-635-11	s	RESISTOR CHIP 10 1/16W (1005)
R112	1-208-635-11	s	RESISTOR CHIP 10 1/16W (1005)
R119	1-208-635-11	s	RESISTOR CHIP 10 1/16W (1005)
R120	1-208-635-11	s	RESISTOR CHIP 10 1/16W (1005)
R121	1-218-949-11	s	RESISTOR,CHIP 470 1/16W

(CPU-347 BOARD)

Ref. No. or Q'ty	Part No.	SP	Description
R122	1-218-949-11	s	RESISTOR,CHIP 470 1/16W
R123	1-218-973-11	s	RESISTOR,CHIP 47K 1/16W (1005)
R124	1-218-973-11	s	RESISTOR,CHIP 47K 1/16W (1005)
R125	1-218-961-11	s	RESISTOR, CHIP 4.7K 1/16W
R126	1-218-961-11	s	RESISTOR, CHIP 4.7K 1/16W
R127	1-208-635-11	s	RESISTOR CHIP 10 1/16W (1005)
R128	1-208-635-11	s	RESISTOR CHIP 10 1/16W (1005)
R129	1-208-635-11	s	RESISTOR CHIP 10 1/16W (1005)
R130	1-208-635-11	s	RESISTOR CHIP 10 1/16W (1005)
R131	1-208-635-11	s	RESISTOR CHIP 10 1/16W (1005)
R133	1-208-635-11	s	RESISTOR CHIP 10 1/16W (1005)
R202	1-218-938-11	s	RESISTOR,CHIP 56 1/16W (1005)
R203	1-218-938-11	s	RESISTOR,CHIP 56 1/16W (1005)
R301	1-218-973-11	s	RESISTOR,CHIP 47K 1/16W (1005)
R302	1-218-973-11	s	RESISTOR,CHIP 47K 1/16W (1005)
R303	1-218-973-11	s	RESISTOR,CHIP 47K 1/16W (1005)
R304	1-218-973-11	s	RESISTOR,CHIP 47K 1/16W (1005)
R305	1-218-973-11	s	RESISTOR,CHIP 47K 1/16W (1005)
R306	1-218-935-11	s	RESISTOR,CHIP 33 1/16W (1005)
R307	1-218-973-11	s	RESISTOR,CHIP 47K 1/16W (1005)
R311	1-218-973-11	s	RESISTOR,CHIP 47K 1/16W (1005)
R312	1-218-973-11	s	RESISTOR,CHIP 47K 1/16W (1005)
R313	1-218-935-11	s	RESISTOR,CHIP 33 1/16W (1005)
R314	1-218-973-11	s	RESISTOR,CHIP 47K 1/16W (1005)
R315	1-218-973-11	s	RESISTOR,CHIP 47K 1/16W (1005)
R316	1-218-973-11	s	RESISTOR,CHIP 47K 1/16W (1005)
R317	1-218-973-11	s	RESISTOR,CHIP 47K 1/16W (1005)
R318	1-218-973-11	s	RESISTOR,CHIP 47K 1/16W (1005)
R320	1-218-990-11	s	RESISTOR,CHIP 0 1/16W (1005)
R321	1-218-935-11	s	RESISTOR,CHIP 33 1/16W (1005)
R322	1-218-973-11	s	RESISTOR,CHIP 47K 1/16W (1005)
R323	1-218-973-11	s	RESISTOR,CHIP 47K 1/16W (1005)
R324	1-218-973-11	s	RESISTOR,CHIP 47K 1/16W (1005)
R325	1-218-973-11	s	RESISTOR,CHIP 47K 1/16W (1005)
R326	1-218-973-11	s	RESISTOR,CHIP 47K 1/16W (1005)
R327	1-218-935-11	s	RESISTOR,CHIP 33 1/16W (1005)
R329	1-218-973-11	s	RESISTOR,CHIP 47K 1/16W (1005)
R330	1-218-945-11	s	RESISTOR,CHIP 220 1/16W(1005)
R331	1-218-945-11	s	RESISTOR,CHIP 220 1/16W(1005)
R332	1-218-973-11	s	RESISTOR,CHIP 47K 1/16W (1005)
R400	1-218-935-11	s	RESISTOR,CHIP 33 1/16W (1005)
R401	1-218-937-11	s	RESISTOR, CHIP 47
R402	1-218-937-11	s	RESISTOR, CHIP 47
R403	1-218-937-11	s	RESISTOR, CHIP 47
R404	1-218-961-11	s	RESISTOR, CHIP 4.7K 1/16W
R405	1-218-961-11	s	RESISTOR, CHIP 4.7K 1/16W
R406	1-218-961-11	s	RESISTOR, CHIP 4.7K 1/16W
R407	1-218-935-11	s	RESISTOR,CHIP 33 1/16W (1005)
R408	1-218-935-11	s	RESISTOR,CHIP 33 1/16W (1005)
R409	1-218-935-11	s	RESISTOR,CHIP 33 1/16W (1005)
R410	1-218-935-11	s	RESISTOR,CHIP 33 1/16W (1005)
R411	1-218-935-11	s	RESISTOR,CHIP 33 1/16W (1005)
R412	1-218-935-11	s	RESISTOR,CHIP 33 1/16W (1005)
R413	1-218-935-11	s	RESISTOR,CHIP 33 1/16W (1005)
R414	1-218-935-11	s	RESISTOR,CHIP 33 1/16W (1005)
R415	1-218-990-11	s	RESISTOR,CHIP 0 1/16W (1005)
R416	1-218-990-11	s	RESISTOR,CHIP 0 1/16W (1005)
R417	1-218-937-11	s	RESISTOR, CHIP 47
R418	1-218-990-11	s	RESISTOR,CHIP 0 1/16W (1005)

(CPU-347 BOARD)

Ref. No. or Q'ty	Part No.	SP	Description
R419	1-218-935-11	s	RESISTOR,CHIP 33 1/16W (1005)
R420	1-218-935-11	s	RESISTOR,CHIP 33 1/16W (1005)
R421	1-218-935-11	s	RESISTOR,CHIP 33 1/16W (1005)
R422	1-218-935-11	s	RESISTOR,CHIP 33 1/16W (1005)
R423	1-218-935-11	s	RESISTOR,CHIP 33 1/16W (1005)
R424	1-218-935-11	s	RESISTOR,CHIP 33 1/16W (1005)
R425	1-218-935-11	s	RESISTOR,CHIP 33 1/16W (1005)
R426	1-218-935-11	s	RESISTOR,CHIP 33 1/16W (1005)
R427	1-218-935-11	s	RESISTOR,CHIP 33 1/16W (1005)
R428	1-218-935-11	s	RESISTOR,CHIP 33 1/16W (1005)
R429	1-218-935-11	s	RESISTOR,CHIP 33 1/16W (1005)
R430	1-218-935-11	s	RESISTOR,CHIP 33 1/16W (1005)
R431	1-218-935-11	s	RESISTOR,CHIP 33 1/16W (1005)
R432	1-218-935-11	s	RESISTOR,CHIP 33 1/16W (1005)
R433	1-218-935-11	s	RESISTOR,CHIP 33 1/16W (1005)
R434	1-218-990-11	s	RESISTOR,CHIP 0 1/16W (1005)
R435	1-218-935-11	s	RESISTOR,CHIP 33 1/16W (1005)
R436	1-218-935-11	s	RESISTOR,CHIP 33 1/16W (1005)
R437	1-218-935-11	s	RESISTOR,CHIP 33 1/16W (1005)
R438	1-218-935-11	s	RESISTOR,CHIP 33 1/16W (1005)
R439	1-218-935-11	s	RESISTOR,CHIP 33 1/16W (1005)
R440	1-218-935-11	s	RESISTOR,CHIP 33 1/16W (1005)
R441	1-218-935-11	s	RESISTOR,CHIP 33 1/16W (1005)
R442	1-218-935-11	s	RESISTOR,CHIP 33 1/16W (1005)
R443	1-218-935-11	s	RESISTOR,CHIP 33 1/16W (1005)
R444	1-218-935-11	s	RESISTOR,CHIP 33 1/16W (1005)
R445	1-218-935-11	s	RESISTOR,CHIP 33 1/16W (1005)
R446	1-218-935-11	s	RESISTOR,CHIP 33 1/16W (1005)
R447	1-218-973-11	s	RESISTOR,CHIP 47K 1/16W (1005)
R451	1-218-938-11	s	RESISTOR,CHIP 56 1/16W (1005)
R452	1-218-938-11	s	RESISTOR,CHIP 56 1/16W (1005)
R453	1-218-938-11	s	RESISTOR,CHIP 56 1/16W (1005)
R454	1-218-938-11	s	RESISTOR,CHIP 56 1/16W (1005)
R455	1-218-938-11	s	RESISTOR,CHIP 56 1/16W (1005)
R456	1-218-938-11	s	RESISTOR,CHIP 56 1/16W (1005)
R457	1-218-938-11	s	RESISTOR,CHIP 56 1/16W (1005)
R458	1-218-938-11	s	RESISTOR,CHIP 56 1/16W (1005)
R459	1-218-938-11	s	RESISTOR,CHIP 56 1/16W (1005)
R460	1-218-938-11	s	RESISTOR,CHIP 56 1/16W (1005)
R461	1-218-938-11	s	RESISTOR,CHIP 56 1/16W (1005)
R462	1-218-938-11	s	RESISTOR,CHIP 56 1/16W (1005)
R463	1-218-938-11	s	RESISTOR,CHIP 56 1/16W (1005)
R464	1-218-938-11	s	RESISTOR,CHIP 56 1/16W (1005)
R465	1-218-938-11	s	RESISTOR,CHIP 56 1/16W (1005)
R466	1-218-938-11	s	RESISTOR,CHIP 56 1/16W (1005)
R467	1-218-937-11	s	RESISTOR, CHIP 47
R468	1-218-945-11	s	RESISTOR,CHIP 220 1/16W(1005)
R470	1-218-990-11	s	RESISTOR,CHIP 0 1/16W (1005)
R471	1-218-990-11	s	RESISTOR,CHIP 0 1/16W (1005)
R500	1-218-961-11	s	RESISTOR, CHIP 4.7K 1/16W
R501	1-218-961-11	s	RESISTOR, CHIP 4.7K 1/16W
R502	1-218-961-11	s	RESISTOR, CHIP 4.7K 1/16W
R504	1-218-935-11	s	RESISTOR,CHIP 33 1/16W (1005)
R505	1-218-935-11	s	RESISTOR,CHIP 33 1/16W (1005)
R506	1-218-935-11	s	RESISTOR,CHIP 33 1/16W (1005)
R507	1-218-935-11	s	RESISTOR,CHIP 33 1/16W (1005)
R508	1-218-935-11	s	RESISTOR,CHIP 33 1/16W (1005)
R509	1-218-935-11	s	RESISTOR,CHIP 33 1/16W (1005)
R510	1-218-935-11	s	RESISTOR,CHIP 33 1/16W (1005)

(CPU-347 BOARD)

Ref. No. or Q'ty	Part No.	SP	Description
R511	1-218-935-11	s	RESISTOR,CHIP 33 1/16W (1005)
R512	1-218-990-11	s	RESISTOR,CHIP 0 1/16W (1005)
R513	1-218-990-11	s	RESISTOR,CHIP 0 1/16W (1005)
R514	1-218-937-11	s	RESISTOR, CHIP 47
R515	1-218-990-11	s	RESISTOR,CHIP 0 1/16W (1005)
R516	1-218-935-11	s	RESISTOR,CHIP 33 1/16W (1005)
R517	1-218-935-11	s	RESISTOR,CHIP 33 1/16W (1005)
R518	1-218-935-11	s	RESISTOR,CHIP 33 1/16W (1005)
R519	1-218-935-11	s	RESISTOR,CHIP 33 1/16W (1005)
R520	1-218-935-11	s	RESISTOR,CHIP 33 1/16W (1005)
R521	1-218-935-11	s	RESISTOR,CHIP 33 1/16W (1005)
R522	1-218-935-11	s	RESISTOR,CHIP 33 1/16W (1005)
R523	1-218-935-11	s	RESISTOR,CHIP 33 1/16W (1005)
R524	1-218-935-11	s	RESISTOR,CHIP 33 1/16W (1005)
R525	1-218-935-11	s	RESISTOR,CHIP 33 1/16W (1005)
R526	1-218-935-11	s	RESISTOR,CHIP 33 1/16W (1005)
R527	1-218-935-11	s	RESISTOR,CHIP 33 1/16W (1005)
R528	1-218-935-11	s	RESISTOR,CHIP 33 1/16W (1005)
R529	1-218-935-11	s	RESISTOR,CHIP 33 1/16W (1005)
R530	1-218-935-11	s	RESISTOR,CHIP 33 1/16W (1005)
R531	1-218-990-11	s	RESISTOR,CHIP 0 1/16W (1005)
R532	1-218-935-11	s	RESISTOR,CHIP 33 1/16W (1005)
R533	1-218-935-11	s	RESISTOR,CHIP 33 1/16W (1005)
R534	1-218-935-11	s	RESISTOR,CHIP 33 1/16W (1005)
R535	1-218-935-11	s	RESISTOR,CHIP 33 1/16W (1005)
R536	1-218-935-11	s	RESISTOR,CHIP 33 1/16W (1005)
R537	1-218-935-11	s	RESISTOR,CHIP 33 1/16W (1005)
R538	1-218-935-11	s	RESISTOR,CHIP 33 1/16W (1005)
R539	1-218-935-11	s	RESISTOR,CHIP 33 1/16W (1005)
R540	1-218-935-11	s	RESISTOR,CHIP 33 1/16W (1005)
R541	1-218-935-11	s	RESISTOR,CHIP 33 1/16W (1005)
R542	1-218-935-11	s	RESISTOR,CHIP 33 1/16W (1005)
R543	1-218-935-11	s	RESISTOR,CHIP 33 1/16W (1005)
R544	1-218-973-11	s	RESISTOR,CHIP 47K 1/16W (1005)
R545	1-218-973-11	s	RESISTOR,CHIP 47K 1/16W (1005)
R548	1-218-938-11	s	RESISTOR,CHIP 56 1/16W (1005)
R549	1-218-938-11	s	RESISTOR,CHIP 56 1/16W (1005)
R550	1-218-938-11	s	RESISTOR,CHIP 56 1/16W (1005)
R551	1-218-938-11	s	RESISTOR,CHIP 56 1/16W (1005)
R552	1-218-938-11	s	RESISTOR,CHIP 56 1/16W (1005)
R553	1-218-938-11	s	RESISTOR,CHIP 56 1/16W (1005)
R554	1-218-938-11	s	RESISTOR,CHIP 56 1/16W (1005)
R555	1-218-938-11	s	RESISTOR,CHIP 56 1/16W (1005)
R556	1-218-938-11	s	RESISTOR,CHIP 56 1/16W (1005)
R557	1-218-938-11	s	RESISTOR,CHIP 56 1/16W (1005)
R558	1-218-938-11	s	RESISTOR,CHIP 56 1/16W (1005)
R559	1-218-938-11	s	RESISTOR,CHIP 56 1/16W (1005)
R560	1-218-938-11	s	RESISTOR,CHIP 56 1/16W (1005)
R561	1-218-938-11	s	RESISTOR,CHIP 56 1/16W (1005)
R562	1-218-938-11	s	RESISTOR,CHIP 56 1/16W (1005)
R563	1-218-938-11	s	RESISTOR,CHIP 56 1/16W (1005)
R564	1-218-945-11	s	RESISTOR,CHIP 220 1/16W(1005)
R565	1-218-990-11	s	RESISTOR,CHIP 0 1/16W (1005)
R566	1-218-990-11	s	RESISTOR,CHIP 0 1/16W (1005)
R567	1-218-973-11	s	RESISTOR,CHIP 47K 1/16W (1005)
R601	1-218-961-11	s	RESISTOR, CHIP 4.7K 1/16W
R602	1-218-961-11	s	RESISTOR, CHIP 4.7K 1/16W
R604	1-218-961-11	s	RESISTOR, CHIP 4.7K 1/16W
R605	1-218-935-11	s	RESISTOR,CHIP 33 1/16W (1005)

(CPU-347 BOARD)

Ref. No. or Q'ty	Part No.	SP	Description
R606	1-218-935-11	s	RESISTOR,CHIP 33 1/16W (1005)
R607	1-218-935-11	s	RESISTOR,CHIP 33 1/16W (1005)
R608	1-218-935-11	s	RESISTOR,CHIP 33 1/16W (1005)
R609	1-218-935-11	s	RESISTOR,CHIP 33 1/16W (1005)
R610	1-218-935-11	s	RESISTOR,CHIP 33 1/16W (1005)
R611	1-218-935-11	s	RESISTOR,CHIP 33 1/16W (1005)
R612	1-218-935-11	s	RESISTOR,CHIP 33 1/16W (1005)
R613	1-218-990-11	s	RESISTOR,CHIP 0 1/16W (1005)
R614	1-218-990-11	s	RESISTOR,CHIP 0 1/16W (1005)
R615	1-218-937-11	s	RESISTOR, CHIP 47
R616	1-218-990-11	s	RESISTOR,CHIP 0 1/16W (1005)
R617	1-218-935-11	s	RESISTOR,CHIP 33 1/16W (1005)
R618	1-218-935-11	s	RESISTOR,CHIP 33 1/16W (1005)
R619	1-218-935-11	s	RESISTOR,CHIP 33 1/16W (1005)
R620	1-218-935-11	s	RESISTOR,CHIP 33 1/16W (1005)
R621	1-218-935-11	s	RESISTOR,CHIP 33 1/16W (1005)
R622	1-218-935-11	s	RESISTOR,CHIP 33 1/16W (1005)
R623	1-218-935-11	s	RESISTOR,CHIP 33 1/16W (1005)
R624	1-218-935-11	s	RESISTOR,CHIP 33 1/16W (1005)
R625	1-218-935-11	s	RESISTOR,CHIP 33 1/16W (1005)
R626	1-218-935-11	s	RESISTOR,CHIP 33 1/16W (1005)
R627	1-218-935-11	s	RESISTOR,CHIP 33 1/16W (1005)
R628	1-218-935-11	s	RESISTOR,CHIP 33 1/16W (1005)
R629	1-218-935-11	s	RESISTOR,CHIP 33 1/16W (1005)
R630	1-218-935-11	s	RESISTOR,CHIP 33 1/16W (1005)
R631	1-218-935-11	s	RESISTOR,CHIP 33 1/16W (1005)
R632	1-218-990-11	s	RESISTOR,CHIP 0 1/16W (1005)
R633	1-218-935-11	s	RESISTOR,CHIP 33 1/16W (1005)
R634	1-218-935-11	s	RESISTOR,CHIP 33 1/16W (1005)
R635	1-218-935-11	s	RESISTOR,CHIP 33 1/16W (1005)
R636	1-218-935-11	s	RESISTOR,CHIP 33 1/16W (1005)
R637	1-218-935-11	s	RESISTOR,CHIP 33 1/16W (1005)
R638	1-218-935-11	s	RESISTOR,CHIP 33 1/16W (1005)
R639	1-218-935-11	s	RESISTOR,CHIP 33 1/16W (1005)
R640	1-218-935-11	s	RESISTOR,CHIP 33 1/16W (1005)
R641	1-218-935-11	s	RESISTOR,CHIP 33 1/16W (1005)
R642	1-218-935-11	s	RESISTOR,CHIP 33 1/16W (1005)
R643	1-218-935-11	s	RESISTOR,CHIP 33 1/16W (1005)
R644	1-218-935-11	s	RESISTOR,CHIP 33 1/16W (1005)
R645	1-218-973-11	s	RESISTOR,CHIP 47K 1/16W (1005)
R646	1-218-973-11	s	RESISTOR,CHIP 47K 1/16W (1005)
R649	1-218-938-11	s	RESISTOR,CHIP 56 1/16W (1005)
R650	1-218-938-11	s	RESISTOR,CHIP 56 1/16W (1005)
R651	1-218-938-11	s	RESISTOR,CHIP 56 1/16W (1005)
R652	1-218-938-11	s	RESISTOR,CHIP 56 1/16W (1005)
R653	1-218-938-11	s	RESISTOR,CHIP 56 1/16W (1005)
R654	1-218-938-11	s	RESISTOR,CHIP 56 1/16W (1005)
R655	1-218-938-11	s	RESISTOR,CHIP 56 1/16W (1005)
R656	1-218-938-11	s	RESISTOR,CHIP 56 1/16W (1005)
R657	1-218-938-11	s	RESISTOR,CHIP 56 1/16W (1005)
R658	1-218-938-11	s	RESISTOR,CHIP 56 1/16W (1005)
R659	1-218-938-11	s	RESISTOR,CHIP 56 1/16W (1005)
R660	1-218-938-11	s	RESISTOR,CHIP 56 1/16W (1005)
R661	1-218-938-11	s	RESISTOR,CHIP 56 1/16W (1005)
R662	1-218-938-11	s	RESISTOR,CHIP 56 1/16W (1005)
R663	1-218-938-11	s	RESISTOR,CHIP 56 1/16W (1005)
R664	1-218-938-11	s	RESISTOR,CHIP 56 1/16W (1005)
R665	1-218-945-11	s	RESISTOR,CHIP 220 1/16W(1005)
R666	1-218-990-11	s	RESISTOR,CHIP 0 1/16W (1005)

(CPU-347 BOARD)

Ref. No. or Q'ty	Part No.	SP	Description
R667	1-218-990-11	s	RESISTOR,CHIP 0 1/16W (1005)
R668	1-218-973-11	s	RESISTOR,CHIP 47K 1/16W (1005)
R669	1-218-973-11	s	RESISTOR,CHIP 47K 1/16W (1005)
R702	1-218-937-11	s	RESISTOR, CHIP 47
R703	1-218-937-11	s	RESISTOR, CHIP 47
R704	1-218-937-11	s	RESISTOR, CHIP 47
R710	1-218-945-11	s	RESISTOR,CHIP 220 1/16W(1005)
R713	1-218-990-11	s	RESISTOR,CHIP 0 1/16W (1005)
R714	1-218-973-11	s	RESISTOR,CHIP 47K 1/16W (1005)
R717	1-218-990-11	s	RESISTOR,CHIP 0 1/16W (1005)
R719	1-218-973-11	s	RESISTOR,CHIP 47K 1/16W (1005)
R720	1-218-973-11	s	RESISTOR,CHIP 47K 1/16W (1005)
R721	1-218-973-11	s	RESISTOR,CHIP 47K 1/16W (1005)
R722	1-218-973-11	s	RESISTOR,CHIP 47K 1/16W (1005)
R903	1-218-973-11	s	RESISTOR,CHIP 47K 1/16W (1005)
R906	1-218-949-11	s	RESISTOR,CHIP 470 1/16W
R907	1-218-965-11	s	RESISTOR, CHIP 10K 1/16W
R908	1-218-945-11	s	RESISTOR,CHIP 220 1/16W(1005)
R910	1-218-961-11	s	RESISTOR, CHIP 4.7K 1/16W
R911	1-218-945-11	s	RESISTOR,CHIP 220 1/16W(1005)
R935	1-218-973-11	s	RESISTOR,CHIP 47K 1/16W (1005)
R936	1-218-990-11	s	RESISTOR,CHIP 0 1/16W (1005)
R940	1-218-973-11	s	RESISTOR,CHIP 47K 1/16W (1005)
R942	1-218-973-11	s	RESISTOR,CHIP 47K 1/16W (1005)
R943	1-218-973-11	s	RESISTOR,CHIP 47K 1/16W (1005)
R944	1-218-945-11	s	RESISTOR,CHIP 220 1/16W(1005)
R1001	1-218-945-11	s	RESISTOR,CHIP 220 1/16W(1005)
R1002	1-208-873-11	s	RESISTOR,CHIP 270 1/16W (1005)
R1003	1-208-683-11	s	RESISTOR CHIP 1K 1/16W (1005)
R1004	1-218-990-11	s	RESISTOR,CHIP 0 1/16W (1005)
R1005	1-218-949-11	s	RESISTOR,CHIP 470 1/16W
R1006	1-218-953-11	s	RESISTOR, CHIP 1K 1/16W
R1007	1-218-953-11	s	RESISTOR, CHIP 1K 1/16W
R1008	1-218-953-11	s	RESISTOR, CHIP 1K 1/16W
R1009	1-218-961-11	s	RESISTOR, CHIP 4.7K 1/16W
R1010	1-218-973-11	s	RESISTOR,CHIP 47K 1/16W (1005)
R1011	1-218-973-11	s	RESISTOR,CHIP 47K 1/16W (1005)
R1012	1-218-965-11	s	RESISTOR, CHIP 10K 1/16W
R1013	1-208-635-11	s	RESISTOR CHIP 10 1/16W (1005)
R1014	1-208-635-11	s	RESISTOR CHIP 10 1/16W (1005)
R1017	1-218-990-11	s	RESISTOR,CHIP 0 1/16W (1005)
R1018	1-218-973-11	s	RESISTOR,CHIP 47K 1/16W (1005)
R1020	1-218-945-11	s	RESISTOR,CHIP 220 1/16W(1005)
R1021	1-218-973-11	s	RESISTOR,CHIP 47K 1/16W (1005)
R1023	1-218-965-11	s	RESISTOR, CHIP 10K 1/16W
R1024	1-218-985-11	s	RESISTOR CHIP 470K 1/16W(1005)
R1025	1-218-985-11	s	RESISTOR CHIP 470K 1/16W(1005)
R1026	1-218-953-11	s	RESISTOR, CHIP 1K 1/16W
R1027	1-218-969-11	s	RESISTOR,CHIP 22K 1/16W (1608)
R1028	1-218-973-11	s	RESISTOR,CHIP 47K 1/16W (1005)
R1030	1-218-990-11	s	RESISTOR,CHIP 0 1/16W (1005)
R1033	1-218-973-11	s	RESISTOR,CHIP 47K 1/16W (1005)
R1034	1-218-973-11	s	RESISTOR,CHIP 47K 1/16W (1005)
R1101	1-208-707-11	s	RESISTOR,CHIP 10K 1/16W (1005)
R1102	1-208-719-11	s	RESISTOR CHIP 33K 1/16W (1005)
R1103	1-218-953-11	s	RESISTOR, CHIP 1K 1/16W
R1104	1-218-953-11	s	RESISTOR, CHIP 1K 1/16W
R1105	1-218-990-11	s	RESISTOR,CHIP 0 1/16W (1005)
R1106	1-218-990-11	s	RESISTOR,CHIP 0 1/16W (1005)

(CPU-347 BOARD)

Ref. No. or Q'ty	Part No.	SP	Description
R1107	1-218-941-81	s	RESISTOR,CHIP 100,1/16W (1005)
R1108	1-218-941-81	s	RESISTOR,CHIP 100,1/16W (1005)
R1111	1-218-965-11	s	RESISTOR, CHIP 10K 1/16W
R1112	1-218-965-11	s	RESISTOR, CHIP 10K 1/16W
R1113	1-208-709-11	s	RESISTOR CHIP 12K 1/16W (1005)
R1114	1-208-695-11	s	RESISTOR CHIP 3.3K 1/16W(1005)
R1115	1-208-697-11	s	RESISTOR CHIP 3.9K 1/16W(1005)
R1116	1-218-961-11	s	RESISTOR, CHIP 4.7K 1/16W
R1117	1-208-689-11	s	RESISTOR CHIP 1.8K 1/16W(1005)
R1118	1-218-973-11	s	RESISTOR,CHIP 47K 1/16W (1005)
R1119	1-218-973-11	s	RESISTOR,CHIP 47K 1/16W (1005)
R1120	1-218-973-11	s	RESISTOR,CHIP 47K 1/16W (1005)
R1121	1-218-973-11	s	RESISTOR,CHIP 47K 1/16W (1005)
R1122	1-218-961-11	s	RESISTOR, CHIP 4.7K 1/16W
R1123	1-218-965-11	s	RESISTOR, CHIP 10K 1/16W
R1124	1-218-965-11	s	RESISTOR, CHIP 10K 1/16W
R1125	1-218-941-81	s	RESISTOR,CHIP 100,1/16W (1005)
R1126	1-208-671-11	s	RESISTOR CHIP 330 1/16W (1005)
R1127	1-218-965-11	s	RESISTOR, CHIP 10K 1/16W
R1128	1-218-965-11	s	RESISTOR, CHIP 10K 1/16W
RB101	1-234-369-21	s	RES, NETWORK 10X4 (1005)
RB102	1-234-369-21	s	RES, NETWORK 10X4 (1005)
RB103	1-234-369-21	s	RES, NETWORK 10X4 (1005)
RB104	1-234-369-21	s	RES, NETWORK 10X4 (1005)
RB105	1-234-369-21	s	RES, NETWORK 10X4 (1005)
RB106	1-234-369-21	s	RES, NETWORK 10X4 (1005)
RB107	1-234-369-21	s	RES, NETWORK 10X4 (1005)
RB108	1-234-369-21	s	RES, NETWORK 10X4 (1005)
RB109	1-234-369-21	s	RES, NETWORK 10X4 (1005)
RB110	1-234-369-21	s	RES, NETWORK 10X4 (1005)
RB111	1-234-369-21	s	RES, NETWORK 10X4 (1005)
RB112	1-234-369-21	s	RES, NETWORK 10X4 (1005)
RB113	1-234-369-21	s	RES, NETWORK 10X4 (1005)
RB114	1-234-369-21	s	RES, NETWORK 10X4 (1005)
RB115	1-234-369-21	s	RES, NETWORK 10X4 (1005)
RB116	1-234-369-21	s	RES, NETWORK 10X4 (1005)
RB117	1-234-369-21	s	RES, NETWORK 10X4 (1005)
RB118	1-234-369-21	s	RES, NETWORK 10X4 (1005)
RB119	1-234-369-21	s	RES, NETWORK 10X4 (1005)
RB120	1-234-369-21	s	RES, NETWORK 10X4 (1005)
RB121	1-234-369-21	s	RES, NETWORK 10X4 (1005)
RB122	1-234-369-21	s	RES, NETWORK 10X4 (1005)
RB123	1-234-369-21	s	RES, NETWORK 10X4 (1005)
RB124	1-234-369-21	s	RES, NETWORK 10X4 (1005)
RB201	1-234-380-11	s	RESISTOE,NETWORK 47KX4 (1005)
RB202	1-234-380-11	s	RESISTOE,NETWORK 47KX4 (1005)
RB203	1-234-380-11	s	RESISTOE,NETWORK 47KX4 (1005)
RB204	1-234-380-11	s	RESISTOE,NETWORK 47KX4 (1005)
RB205	1-234-380-11	s	RESISTOE,NETWORK 47KX4 (1005)
RB206	1-234-380-11	s	RESISTOE,NETWORK 47KX4 (1005)
RB207	1-234-380-11	s	RESISTOE,NETWORK 47KX4 (1005)
RB208	1-234-380-11	s	RESISTOE,NETWORK 47KX4 (1005)
RB301	1-234-380-11	s	RESISTOE,NETWORK 47KX4 (1005)
RB302	1-234-380-11	s	RESISTOE,NETWORK 47KX4 (1005)
RB303	1-234-380-11	s	RESISTOE,NETWORK 47KX4 (1005)
RB400	1-234-380-11	s	RESISTOE,NETWORK 47KX4 (1005)
RB401	1-234-380-11	s	RESISTOE,NETWORK 47KX4 (1005)
RB402	1-234-380-11	s	RESISTOE,NETWORK 47KX4 (1005)
RB403	1-234-380-11	s	RESISTOE,NETWORK 47KX4 (1005)

(CPU-347 BOARD)

Ref. No. or Q'ty	Part No.	SP	Description
RB404	1-234-380-11	s	RESISTOE,NETWORK 47KX4 (1005)
RB405	1-234-380-11	s	RESISTOE,NETWORK 47KX4 (1005)
RB406	1-234-380-11	s	RESISTOE,NETWORK 47KX4 (1005)
RB407	1-234-380-11	s	RESISTOE,NETWORK 47KX4 (1005)
RB500	1-234-380-11	s	RESISTOE,NETWORK 47KX4 (1005)
RB501	1-234-380-11	s	RESISTOE,NETWORK 47KX4 (1005)
RB502	1-234-380-11	s	RESISTOE,NETWORK 47KX4 (1005)
RB503	1-234-380-11	s	RESISTOE,NETWORK 47KX4 (1005)
RB504	1-234-380-11	s	RESISTOE,NETWORK 47KX4 (1005)
RB505	1-234-380-11	s	RESISTOE,NETWORK 47KX4 (1005)
RB506	1-234-380-11	s	RESISTOE,NETWORK 47KX4 (1005)
RB507	1-234-380-11	s	RESISTOE,NETWORK 47KX4 (1005)
RB600	1-234-380-11	s	RESISTOE,NETWORK 47KX4 (1005)
RB601	1-234-380-11	s	RESISTOE,NETWORK 47KX4 (1005)
RB602	1-234-380-11	s	RESISTOE,NETWORK 47KX4 (1005)
RB603	1-234-380-11	s	RESISTOE,NETWORK 47KX4 (1005)
RB604	1-234-380-11	s	RESISTOE,NETWORK 47KX4 (1005)
RB605	1-234-380-11	s	RESISTOE,NETWORK 47KX4 (1005)
RB606	1-234-380-11	s	RESISTOE,NETWORK 47KX4 (1005)
RB607	1-234-380-11	s	RESISTOE,NETWORK 47KX4 (1005)
RB608	1-234-380-11	s	RESISTOE,NETWORK 47KX4 (1005)
RB609	1-234-380-11	s	RESISTOE,NETWORK 47KX4 (1005)
RB610	1-234-380-11	s	RESISTOE,NETWORK 47KX4 (1005)
RB611	1-234-380-11	s	RESISTOE,NETWORK 47KX4 (1005)
RB801	1-234-380-11	s	RESISTOE,NETWORK 47KX4 (1005)
RB802	1-234-380-11	s	RESISTOE,NETWORK 47KX4 (1005)
RB803	1-234-380-11	s	RESISTOE,NETWORK 47KX4 (1005)
RB804	1-234-380-11	s	RESISTOE,NETWORK 47KX4 (1005)
RB809	1-234-380-11	s	RESISTOE,NETWORK 47KX4 (1005)
RB810	1-234-380-11	s	RESISTOE,NETWORK 47KX4 (1005)
RB811	1-234-380-11	s	RESISTOE,NETWORK 47KX4 (1005)
RB812	1-234-380-11	s	RESISTOE,NETWORK 47KX4 (1005)
RB901	1-234-380-11	s	RESISTOE,NETWORK 47KX4 (1005)
RB902	1-234-380-11	s	RESISTOE,NETWORK 47KX4 (1005)
RB903	1-234-380-11	s	RESISTOE,NETWORK 47KX4 (1005)
RB904	1-234-380-11	s	RESISTOE,NETWORK 47KX4 (1005)
RB905	1-234-380-11	s	RESISTOE,NETWORK 47KX4 (1005)
RB906	1-234-380-11	s	RESISTOE,NETWORK 47KX4 (1005)
RB907	1-234-380-11	s	RESISTOE,NETWORK 47KX4 (1005)
RB1001	1-234-378-11	s	RES, NETWORK 10KX4 (1005)
RB1002	1-234-369-21	s	RES, NETWORK 10X4 (1005)
RB1003	1-234-369-21	s	RES, NETWORK 10X4 (1005)
RB1004	1-234-369-21	s	RES, NETWORK 10X4 (1005)
S1001	1-786-608-21	s	SWITCH, TACTILE
THP111	1-809-357-21	s	THERMISTOR
THP112	1-533-817-21	s	THERMISTOR
VDR101	1-801-922-11	s	VARISTOR, CHIP
VDR111	1-801-922-11	s	VARISTOR, CHIP
VDR901	1-801-922-11	s	VARISTOR, CHIP
VDR902	1-803-974-11	s	VARISTOR, CHIP
VDR903	1-803-974-11	s	VARISTOR, CHIP
VDR904	1-803-974-11	s	VARISTOR, CHIP
VDR905	1-801-922-11	s	VARISTOR, CHIP
VDR906	1-803-974-11	s	VARISTOR, CHIP
VDR907	1-803-974-11	s	VARISTOR, CHIP
X401	1-813-155-21	s	OSCILLATOR, CRYSTAL

CPU-357 BOARD

Ref. No. or Q'ty	Part No.	SP	Description
C101	1-164-937-11	s	CAPACITOR,CHIP CERAMIC 1000PF
C102	1-164-937-11	s	CAPACITOR,CHIP CERAMIC 1000PF
C103	1-164-937-11	s	CAPACITOR,CHIP CERAMIC 1000PF
C104	1-125-777-11	s	CAPACITOR CERAMIC 0.1MF/10V
C105	1-164-937-11	s	CAPACITOR,CHIP CERAMIC 1000PF
C106	1-125-777-11	s	CAPACITOR CERAMIC 0.1MF/10V
C107	1-125-777-11	s	CAPACITOR CERAMIC 0.1MF/10V
C108	1-126-396-11	s	CAPACITOR,ELECT 47MF/16V(CHIP)
C109	1-125-777-11	s	CAPACITOR CERAMIC 0.1MF/10V
C110	1-126-396-11	s	CAPACITOR,ELECT 47MF/16V(CHIP)
C111	1-126-396-11	s	CAPACITOR,ELECT 47MF/16V(CHIP)
C112	1-126-396-11	s	CAPACITOR,ELECT 47MF/16V(CHIP)
C113	1-164-937-11	s	CAPACITOR,CHIP CERAMIC 1000PF
C114	1-164-937-11	s	CAPACITOR,CHIP CERAMIC 1000PF
C115	1-164-937-11	s	CAPACITOR,CHIP CERAMIC 1000PF
C116	1-164-937-11	s	CAPACITOR,CHIP CERAMIC 1000PF
C117	1-125-777-11	s	CAPACITOR CERAMIC 0.1MF/10V
C118	1-125-777-11	s	CAPACITOR CERAMIC 0.1MF/10V
C119	1-125-777-11	s	CAPACITOR CERAMIC 0.1MF/10V
C120	1-125-777-11	s	CAPACITOR CERAMIC 0.1MF/10V
C121	1-126-396-11	s	CAPACITOR,ELECT 47MF/16V(CHIP)
C122	1-126-396-11	s	CAPACITOR,ELECT 47MF/16V(CHIP)
C123	1-126-396-11	s	CAPACITOR,ELECT 47MF/16V(CHIP)
C124	1-126-396-11	s	CAPACITOR,ELECT 47MF/16V(CHIP)
C125	1-127-820-11	s	CAPACITOR, SQUARE CHIP 4.7MF
C126	1-127-820-11	s	CAPACITOR, SQUARE CHIP 4.7MF
C127	1-127-820-11	s	CAPACITOR, SQUARE CHIP 4.7MF
C128	1-127-820-11	s	CAPACITOR, SQUARE CHIP 4.7MF
C129	1-127-820-11	s	CAPACITOR, SQUARE CHIP 4.7MF
C130	1-127-820-11	s	CAPACITOR, SQUARE CHIP 4.7MF
C131	1-127-820-11	s	CAPACITOR, SQUARE CHIP 4.7MF
C132	1-127-820-11	s	CAPACITOR, SQUARE CHIP 4.7MF
C200	1-125-777-11	s	CAPACITOR CERAMIC 0.1MF/10V
C201	1-126-396-11	s	CAPACITOR,ELECT 47MF/16V(CHIP)
C203	1-164-874-11	s	CAPACITOR,CHIP CERAMIC 100PF
C204	1-104-607-11	s	CAPACITOR ELECT 47MF/16V(105C)
C205	1-127-820-11	s	CAPACITOR, SQUARE CHIP 4.7MF
C206	1-127-820-11	s	CAPACITOR, SQUARE CHIP 4.7MF
C207	1-107-826-11	s	CAPACITOR,CHIP CERAMIC 0.1MF
C208	1-164-874-11	s	CAPACITOR,CHIP CERAMIC 100PF
C209	1-127-820-11	s	CAPACITOR, SQUARE CHIP 4.7MF
C210	1-164-874-11	s	CAPACITOR,CHIP CERAMIC 100PF
C211	1-164-943-11	s	CAPACITOR,CHIP CERAMIC 0.01MF
C700	1-125-777-11	s	CAPACITOR CERAMIC 0.1MF/10V
C701	1-164-937-11	s	CAPACITOR,CHIP CERAMIC 1000PF
C702	1-164-937-11	s	CAPACITOR,CHIP CERAMIC 1000PF
C703	1-125-777-11	s	CAPACITOR CERAMIC 0.1MF/10V
C704	1-164-874-11	s	CAPACITOR,CHIP CERAMIC 100PF
C900	1-126-396-11	s	CAPACITOR,ELECT 47MF/16V(CHIP)
C901	1-125-777-11	s	CAPACITOR CERAMIC 0.1MF/10V
C902	1-164-943-11	s	CAPACITOR,CHIP CERAMIC 0.01MF
C903	1-127-820-11	s	CAPACITOR, SQUARE CHIP 4.7MF
C904	1-127-820-11	s	CAPACITOR, SQUARE CHIP 4.7MF
C905	1-127-820-11	s	CAPACITOR, SQUARE CHIP 4.7MF
C906	1-127-820-11	s	CAPACITOR, SQUARE CHIP 4.7MF
C907	1-125-777-11	s	CAPACITOR CERAMIC 0.1MF/10V
C908	1-164-937-11	s	CAPACITOR,CHIP CERAMIC 1000PF
C909	1-125-777-11	s	CAPACITOR CERAMIC 0.1MF/10V
C910	1-164-937-11	s	CAPACITOR,CHIP CERAMIC 1000PF

(CPU-357 BOARD)

Ref. No. or Q'ty	Part No.	SP	Description
C911	1-125-777-11	s	CAPACITOR CERAMIC 0.1MF/10V
C912	1-164-937-11	s	CAPACITOR,CHIP CERAMIC 1000PF
C913	1-125-777-11	s	CAPACITOR CERAMIC 0.1MF/10V
C914	1-164-937-11	s	CAPACITOR,CHIP CERAMIC 1000PF
C915	1-125-777-11	s	CAPACITOR CERAMIC 0.1MF/10V
C916	1-164-937-11	s	CAPACITOR,CHIP CERAMIC 1000PF
C917	1-125-777-11	s	CAPACITOR CERAMIC 0.1MF/10V
C918	1-164-937-11	s	CAPACITOR,CHIP CERAMIC 1000PF
C919	1-125-777-11	s	CAPACITOR CERAMIC 0.1MF/10V
C920	1-164-937-11	s	CAPACITOR,CHIP CERAMIC 1000PF
C921	1-125-777-11	s	CAPACITOR CERAMIC 0.1MF/10V
C922	1-164-937-11	s	CAPACITOR,CHIP CERAMIC 1000PF
C923	1-125-777-11	s	CAPACITOR CERAMIC 0.1MF/10V
C924	1-164-937-11	s	CAPACITOR,CHIP CERAMIC 1000PF
C925	1-125-777-11	s	CAPACITOR CERAMIC 0.1MF/10V
C926	1-164-937-11	s	CAPACITOR,CHIP CERAMIC 1000PF
C927	1-125-777-11	s	CAPACITOR CERAMIC 0.1MF/10V
C928	1-164-937-11	s	CAPACITOR,CHIP CERAMIC 1000PF
C929	1-125-777-11	s	CAPACITOR CERAMIC 0.1MF/10V
C930	1-164-937-11	s	CAPACITOR,CHIP CERAMIC 1000PF
C931	1-125-777-11	s	CAPACITOR CERAMIC 0.1MF/10V
C932	1-164-937-11	s	CAPACITOR,CHIP CERAMIC 1000PF
C933	1-125-777-11	s	CAPACITOR CERAMIC 0.1MF/10V
C934	1-164-937-11	s	CAPACITOR,CHIP CERAMIC 1000PF
C935	1-125-777-11	s	CAPACITOR CERAMIC 0.1MF/10V
C936	1-164-937-11	s	CAPACITOR,CHIP CERAMIC 1000PF
C937	1-125-777-11	s	CAPACITOR CERAMIC 0.1MF/10V
C938	1-164-937-11	s	CAPACITOR,CHIP CERAMIC 1000PF
C939	1-125-777-11	s	CAPACITOR CERAMIC 0.1MF/10V
C940	1-164-937-11	s	CAPACITOR,CHIP CERAMIC 1000PF
C941	1-125-777-11	s	CAPACITOR CERAMIC 0.1MF/10V
C942	1-164-937-11	s	CAPACITOR,CHIP CERAMIC 1000PF
C943	1-125-777-11	s	CAPACITOR CERAMIC 0.1MF/10V
C944	1-164-937-11	s	CAPACITOR,CHIP CERAMIC 1000PF
C945	1-125-777-11	s	CAPACITOR CERAMIC 0.1MF/10V
C946	1-164-937-11	s	CAPACITOR,CHIP CERAMIC 1000PF
C947	1-125-777-11	s	CAPACITOR CERAMIC 0.1MF/10V
C948	1-164-937-11	s	CAPACITOR,CHIP CERAMIC 1000PF
C949	1-125-777-11	s	CAPACITOR CERAMIC 0.1MF/10V
C950	1-164-937-11	s	CAPACITOR,CHIP CERAMIC 1000PF
C951	1-125-777-11	s	CAPACITOR CERAMIC 0.1MF/10V
C952	1-164-937-11	s	CAPACITOR,CHIP CERAMIC 1000PF
C953	1-125-777-11	s	CAPACITOR CERAMIC 0.1MF/10V
C954	1-164-937-11	s	CAPACITOR,CHIP CERAMIC 1000PF
C955	1-125-777-11	s	CAPACITOR CERAMIC 0.1MF/10V
C956	1-164-937-11	s	CAPACITOR,CHIP CERAMIC 1000PF
C957	1-125-777-11	s	CAPACITOR CERAMIC 0.1MF/10V
C958	1-164-937-11	s	CAPACITOR,CHIP CERAMIC 1000PF
C959	1-125-777-11	s	CAPACITOR CERAMIC 0.1MF/10V
C960	1-164-937-11	s	CAPACITOR,CHIP CERAMIC 1000PF
C961	1-125-777-11	s	CAPACITOR CERAMIC 0.1MF/10V
C962	1-164-937-11	s	CAPACITOR,CHIP CERAMIC 1000PF
C963	1-125-777-11	s	CAPACITOR CERAMIC 0.1MF/10V
C964	1-164-937-11	s	CAPACITOR,CHIP CERAMIC 1000PF
C965	1-125-777-11	s	CAPACITOR CERAMIC 0.1MF/10V
C966	1-164-937-11	s	CAPACITOR,CHIP CERAMIC 1000PF
C967	1-125-777-11	s	CAPACITOR CERAMIC 0.1MF/10V
C968	1-164-937-11	s	CAPACITOR,CHIP CERAMIC 1000PF
C969	1-125-777-11	s	CAPACITOR CERAMIC 0.1MF/10V

(CPU-357 BOARD)

Ref. No. or Q'ty	Part No.	SP	Description
C970	1-164-937-11	s	CAPACITOR,CHIP CERAMIC 1000PF
C971	1-125-777-11	s	CAPACITOR CERAMIC 0.1MF/10V
C972	1-164-937-11	s	CAPACITOR,CHIP CERAMIC 1000PF
C973	1-125-777-11	s	CAPACITOR CERAMIC 0.1MF/10V
C974	1-164-937-11	s	CAPACITOR,CHIP CERAMIC 1000PF
C975	1-125-777-11	s	CAPACITOR CERAMIC 0.1MF/10V
C976	1-164-937-11	s	CAPACITOR,CHIP CERAMIC 1000PF
C977	1-125-777-11	s	CAPACITOR CERAMIC 0.1MF/10V
C978	1-164-937-11	s	CAPACITOR,CHIP CERAMIC 1000PF
C1000	1-127-820-11	s	CAPACITOR, SQUARE CHIP 4.7MF
C1001	1-127-820-11	s	CAPACITOR, SQUARE CHIP 4.7MF
C1002	1-127-820-11	s	CAPACITOR, SQUARE CHIP 4.7MF
C1003	1-127-820-11	s	CAPACITOR, SQUARE CHIP 4.7MF
C1004	1-127-573-11	s	CAPACITOR,CERAMIC 1MFB(2012)
C1005	1-125-777-11	s	CAPACITOR CERAMIC 0.1MF/10V
C1006	1-164-937-11	s	CAPACITOR,CHIP CERAMIC 1000PF
C1007	1-127-573-11	s	CAPACITOR,CERAMIC 1MFB(2012)
C1008	1-125-777-11	s	CAPACITOR CERAMIC 0.1MF/10V
C1009	1-127-573-11	s	CAPACITOR,CERAMIC 1MFB(2012)
C1010	1-164-937-11	s	CAPACITOR,CHIP CERAMIC 1000PF
C1011	1-125-777-11	s	CAPACITOR CERAMIC 0.1MF/10V
C1012	1-164-937-11	s	CAPACITOR,CHIP CERAMIC 1000PF
C1013	1-127-573-11	s	CAPACITOR,CERAMIC 1MFB(2012)
C1014	1-125-777-11	s	CAPACITOR CERAMIC 0.1MF/10V
C1015	1-127-573-11	s	CAPACITOR,CERAMIC 1MFB(2012)
C1016	1-164-937-11	s	CAPACITOR,CHIP CERAMIC 1000PF
C1017	1-125-777-11	s	CAPACITOR CERAMIC 0.1MF/10V
C1018	1-164-937-11	s	CAPACITOR,CHIP CERAMIC 1000PF
C1019	1-127-573-11	s	CAPACITOR,CERAMIC 1MFB(2012)
C1020	1-125-777-11	s	CAPACITOR CERAMIC 0.1MF/10V
C1021	1-164-937-11	s	CAPACITOR,CHIP CERAMIC 1000PF
C1066	1-164-937-11	s	CAPACITOR,CHIP CERAMIC 1000PF
C1067	1-125-777-11	s	CAPACITOR CERAMIC 0.1MF/10V
C1068	1-164-862-11	s	CAPACITOR,CHIP CERAMIC 33PF/50
C1200	1-164-874-11	s	CAPACITOR,CHIP CERAMIC 100PF
C1201	1-125-777-11	s	CAPACITOR CERAMIC 0.1MF/10V
C1202	1-125-777-11	s	CAPACITOR CERAMIC 0.1MF/10V
C1203	1-125-777-11	s	CAPACITOR CERAMIC 0.1MF/10V
C1204	1-125-777-11	s	CAPACITOR CERAMIC 0.1MF/10V
C1205	1-125-777-11	s	CAPACITOR CERAMIC 0.1MF/10V
C1206	1-164-943-11	s	CAPACITOR,CHIP CERAMIC 0.01MF
C1207	1-164-943-11	s	CAPACITOR,CHIP CERAMIC 0.01MF
C1208	1-164-874-11	s	CAPACITOR,CHIP CERAMIC 100PF
C1209	1-164-874-11	s	CAPACITOR,CHIP CERAMIC 100PF
C1210	1-125-777-11	s	CAPACITOR CERAMIC 0.1MF/10V
C1211	1-128-416-11	s	CAPACITOR ELECT 100MF/16V(105C
C1212	1-125-777-11	s	CAPACITOR CERAMIC 0.1MF/10V
C1214	1-165-805-91	s	CAPACITOR, CHIPCERAMIC100000PF
C1300	1-127-820-11	s	CAPACITOR, SQUARE CHIP 4.7MF
C1301	1-125-777-11	s	CAPACITOR CERAMIC 0.1MF/10V
C1302	1-164-937-11	s	CAPACITOR,CHIP CERAMIC 1000PF
C1303	1-125-777-11	s	CAPACITOR CERAMIC 0.1MF/10V
C1304	1-164-937-11	s	CAPACITOR,CHIP CERAMIC 1000PF
C1305	1-127-820-11	s	CAPACITOR, SQUARE CHIP 4.7MF
C1306	1-125-777-11	s	CAPACITOR CERAMIC 0.1MF/10V
C1307	1-125-777-11	s	CAPACITOR CERAMIC 0.1MF/10V
C1308	1-164-937-11	s	CAPACITOR,CHIP CERAMIC 1000PF
C1309	1-164-937-11	s	CAPACITOR,CHIP CERAMIC 1000PF
C1310	1-125-777-11	s	CAPACITOR CERAMIC 0.1MF/10V

(CPU-357 BOARD)

Ref. No. or Q'ty	Part No.	SP	Description
C1311	1-127-820-11	s	CAPACITOR, SQUARE CHIP 4.7MF
C1312	1-125-777-11	s	CAPACITOR CERAMIC 0.1MF/10V
C1313	1-164-937-11	s	CAPACITOR,CHIP CERAMIC 1000PF
C1314	1-125-777-11	s	CAPACITOR CERAMIC 0.1MF/10V
C1315	1-164-937-11	s	CAPACITOR,CHIP CERAMIC 1000PF
C1316	1-127-820-11	s	CAPACITOR, SQUARE CHIP 4.7MF
C1317	1-125-777-11	s	CAPACITOR CERAMIC 0.1MF/10V
C1318	1-125-777-11	s	CAPACITOR CERAMIC 0.1MF/10V
C1319	1-164-937-11	s	CAPACITOR,CHIP CERAMIC 1000PF
C1320	1-164-937-11	s	CAPACITOR,CHIP CERAMIC 1000PF
C1321	1-164-937-11	s	CAPACITOR,CHIP CERAMIC 1000PF
C1322	1-125-777-11	s	CAPACITOR CERAMIC 0.1MF/10V
C1323	1-164-937-11	s	CAPACITOR,CHIP CERAMIC 1000PF
C1400	1-127-820-11	s	CAPACITOR, SQUARE CHIP 4.7MF
C1401	1-127-820-11	s	CAPACITOR, SQUARE CHIP 4.7MF
C1402	1-127-820-11	s	CAPACITOR, SQUARE CHIP 4.7MF
C1403	1-127-820-11	s	CAPACITOR, SQUARE CHIP 4.7MF
C1404	1-107-826-11	s	CAPACITOR,CHIP CERAMIC 0.1MF
C1405	1-107-826-11	s	CAPACITOR,CHIP CERAMIC 0.1MF
C1406	1-164-943-11	s	CAPACITOR,CHIP CERAMIC 0.01MF
C1407	1-164-943-11	s	CAPACITOR,CHIP CERAMIC 0.01MF
C1408	1-127-573-11	s	CAPACITOR,CERAMIC 1MFB(2012)
C1409	1-127-573-11	s	CAPACITOR,CERAMIC 1MFB(2012)
C1410	1-107-826-11	s	CAPACITOR,CHIP CERAMIC 0.1MF
C1411	1-107-826-11	s	CAPACITOR,CHIP CERAMIC 0.1MF
C1412	1-164-943-11	s	CAPACITOR,CHIP CERAMIC 0.01MF
C1413	1-164-943-11	s	CAPACITOR,CHIP CERAMIC 0.01MF
C1414	1-127-573-11	s	CAPACITOR,CERAMIC 1MFB(2012)
C1415	1-107-826-11	s	CAPACITOR,CHIP CERAMIC 0.1MF
C1416	1-164-943-11	s	CAPACITOR,CHIP CERAMIC 0.01MF
C1417	1-164-943-11	s	CAPACITOR,CHIP CERAMIC 0.01MF
C1418	1-164-943-11	s	CAPACITOR,CHIP CERAMIC 0.01MF
C1419	1-127-573-11	s	CAPACITOR,CERAMIC 1MFB(2012)
C1420	1-104-607-11	s	CAPACITOR ELECT 47MF/16V(105C)
C1421	1-127-820-11	s	CAPACITOR, SQUARE CHIP 4.7MF
C1423	1-164-874-11	s	CAPACITOR,CHIP CERAMIC 100PF
C1424	1-164-943-11	s	CAPACITOR,CHIP CERAMIC 0.01MF
C1425	1-107-826-11	s	CAPACITOR,CHIP CERAMIC 0.1MF
C1500	1-164-874-11	s	CAPACITOR,CHIP CERAMIC 100PF
C1501	1-127-820-11	s	CAPACITOR, SQUARE CHIP 4.7MF
C1502	1-127-820-11	s	CAPACITOR, SQUARE CHIP 4.7MF
C1503	1-127-820-11	s	CAPACITOR, SQUARE CHIP 4.7MF
C1504	1-127-820-11	s	CAPACITOR, SQUARE CHIP 4.7MF
C1505	1-107-826-11	s	CAPACITOR,CHIP CERAMIC 0.1MF
C1506	1-107-826-11	s	CAPACITOR,CHIP CERAMIC 0.1MF
C1507	1-164-937-11	s	CAPACITOR,CHIP CERAMIC 1000PF
C1508	1-164-937-11	s	CAPACITOR,CHIP CERAMIC 1000PF
C1601	1-128-416-11	s	CAPACITOR ELECT 100MF/16V(105C
C1602	1-128-416-11	s	CAPACITOR ELECT 100MF/16V(105C
C1603	1-127-820-11	s	CAPACITOR, SQUARE CHIP 4.7MF
C1604	1-127-820-11	s	CAPACITOR, SQUARE CHIP 4.7MF
C1605	1-125-777-11	s	CAPACITOR CERAMIC 0.1MF/10V
C1606	1-125-777-11	s	CAPACITOR CERAMIC 0.1MF/10V
C1607	1-125-777-11	s	CAPACITOR CERAMIC 0.1MF/10V
C1608	1-164-937-11	s	CAPACITOR,CHIP CERAMIC 1000PF
C1609	1-164-937-11	s	CAPACITOR,CHIP CERAMIC 1000PF
C1610	1-164-937-11	s	CAPACITOR,CHIP CERAMIC 1000PF
C1611	1-125-777-11	s	CAPACITOR CERAMIC 0.1MF/10V
C1612	1-125-777-11	s	CAPACITOR CERAMIC 0.1MF/10V

(CPU-357 BOARD)

Ref. No. or Q'ty	Part No.	SP	Description
C1613	1-164-874-11	s	CAPACITOR,CHIP CERAMIC 100PF
C1614	1-164-937-11	s	CAPACITOR,CHIP CERAMIC 1000PF
C1615	1-164-937-11	s	CAPACITOR,CHIP CERAMIC 1000PF
C1616	1-125-777-11	s	CAPACITOR CERAMIC 0.1MF/10V
C1617	1-125-777-11	s	CAPACITOR CERAMIC 0.1MF/10V
C1618	1-164-937-11	s	CAPACITOR,CHIP CERAMIC 1000PF
C1619	1-164-937-11	s	CAPACITOR,CHIP CERAMIC 1000PF
C1620	1-125-777-11	s	CAPACITOR CERAMIC 0.1MF/10V
C1621	1-164-937-11	s	CAPACITOR,CHIP CERAMIC 1000PF
C1622	1-125-777-11	s	CAPACITOR CERAMIC 0.1MF/10V
C1623	1-164-937-11	s	CAPACITOR,CHIP CERAMIC 1000PF
C1624	1-125-777-11	s	CAPACITOR CERAMIC 0.1MF/10V
C1625	1-164-937-11	s	CAPACITOR,CHIP CERAMIC 1000PF
C1626	1-127-573-11	s	CAPACITOR,CERAMIC 1MFB(2012)
C1627	1-115-339-11	s	CAPACITOR,CERAMIC 0.1MF/50V
C1628	1-115-339-11	s	CAPACITOR,CERAMIC 0.1MF/50V
C1629	1-164-937-11	s	CAPACITOR,CHIP CERAMIC 1000PF
C1630	1-164-937-11	s	CAPACITOR,CHIP CERAMIC 1000PF
C1631	1-115-339-11	s	CAPACITOR,CERAMIC 0.1MF/50V
C1632	1-115-339-11	s	CAPACITOR,CERAMIC 0.1MF/50V
C1633	1-164-937-11	s	CAPACITOR,CHIP CERAMIC 1000PF
C1634	1-164-937-11	s	CAPACITOR,CHIP CERAMIC 1000PF
C1700	1-125-777-11	s	CAPACITOR CERAMIC 0.1MF/10V
C1701	1-127-820-11	s	CAPACITOR, SQUARE CHIP 4.7MF
C1702	1-125-777-11	s	CAPACITOR CERAMIC 0.1MF/10V
C1803	1-125-777-11	s	CAPACITOR CERAMIC 0.1MF/10V
C1804	1-164-937-11	s	CAPACITOR,CHIP CERAMIC 1000PF
C1810	1-125-777-11	s	CAPACITOR CERAMIC 0.1MF/10V
C1812	1-125-777-11	s	CAPACITOR CERAMIC 0.1MF/10V
C1813	1-164-937-11	s	CAPACITOR,CHIP CERAMIC 1000PF
C1818	1-125-777-11	s	CAPACITOR CERAMIC 0.1MF/10V
C1819	1-125-777-11	s	CAPACITOR CERAMIC 0.1MF/10V
C1900	1-127-820-11	s	CAPACITOR, SQUARE CHIP 4.7MF
C1901	1-127-820-11	s	CAPACITOR, SQUARE CHIP 4.7MF
C1902	1-127-820-11	s	CAPACITOR, SQUARE CHIP 4.7MF
C1903	1-127-820-11	s	CAPACITOR, SQUARE CHIP 4.7MF
C1904	1-107-826-11	s	CAPACITOR,CHIP CERAMIC 0.1MF
C1905	1-107-826-11	s	CAPACITOR,CHIP CERAMIC 0.1MF
C1906	1-164-943-11	s	CAPACITOR,CHIP CERAMIC 0.01MF
C1907	1-164-943-11	s	CAPACITOR,CHIP CERAMIC 0.01MF
C1908	1-127-573-11	s	CAPACITOR,CERAMIC 1MFB(2012)
C1909	1-127-573-11	s	CAPACITOR,CERAMIC 1MFB(2012)
C1910	1-107-826-11	s	CAPACITOR,CHIP CERAMIC 0.1MF
C1911	1-107-826-11	s	CAPACITOR,CHIP CERAMIC 0.1MF
C1912	1-164-943-11	s	CAPACITOR,CHIP CERAMIC 0.01MF
C1913	1-164-943-11	s	CAPACITOR,CHIP CERAMIC 0.01MF
C1914	1-164-874-11	s	CAPACITOR,CHIP CERAMIC 100PF
C3000	1-126-396-11	s	CAPACITOR,ELECT 47MF/16V(CHIP)
C3001	1-126-396-11	s	CAPACITOR,ELECT 47MF/16V(CHIP)
C3002	1-127-820-11	s	CAPACITOR, SQUARE CHIP 4.7MF
C3003	1-127-820-11	s	CAPACITOR, SQUARE CHIP 4.7MF
C3004	1-164-943-11	s	CAPACITOR,CHIP CERAMIC 0.01MF
C3005	1-164-943-11	s	CAPACITOR,CHIP CERAMIC 0.01MF
C3006	1-164-874-11	s	CAPACITOR,CHIP CERAMIC 100PF
C3007	1-164-874-11	s	CAPACITOR,CHIP CERAMIC 100PF
C3008	1-107-826-11	s	CAPACITOR,CHIP CERAMIC 0.1MF
C3009	1-164-937-11	s	CAPACITOR,CHIP CERAMIC 1000PF
C3010	1-107-826-11	s	CAPACITOR,CHIP CERAMIC 0.1MF
C3011	1-164-937-11	s	CAPACITOR,CHIP CERAMIC 1000PF

(CPU-357 BOARD)

Ref. No. or Q'ty	Part No.	SP	Description
C3012	1-107-826-11	s	CAPACITOR,CHIP CERAMIC 0.1MF
C3013	1-164-937-11	s	CAPACITOR,CHIP CERAMIC 1000PF
C3014	1-107-826-11	s	CAPACITOR,CHIP CERAMIC 0.1MF
C3015	1-164-937-11	s	CAPACITOR,CHIP CERAMIC 1000PF
C3016	1-107-826-11	s	CAPACITOR,CHIP CERAMIC 0.1MF
C3017	1-164-937-11	s	CAPACITOR,CHIP CERAMIC 1000PF
C3018	1-107-826-11	s	CAPACITOR,CHIP CERAMIC 0.1MF
C3019	1-164-937-11	s	CAPACITOR,CHIP CERAMIC 1000PF
C3020	1-164-937-11	s	CAPACITOR,CHIP CERAMIC 1000PF
C3021	1-125-777-11	s	CAPACITOR CERAMIC 0.1MF/10V
C3022	1-164-937-11	s	CAPACITOR,CHIP CERAMIC 1000PF
C3023	1-125-777-11	s	CAPACITOR CERAMIC 0.1MF/10V
C3024	1-107-826-11	s	CAPACITOR,CHIP CERAMIC 0.1MF
C3025	1-164-937-11	s	CAPACITOR,CHIP CERAMIC 1000PF
C3026	1-107-826-11	s	CAPACITOR,CHIP CERAMIC 0.1MF
C3027	1-164-937-11	s	CAPACITOR,CHIP CERAMIC 1000PF
C3028	1-107-826-11	s	CAPACITOR,CHIP CERAMIC 0.1MF
C3029	1-164-937-11	s	CAPACITOR,CHIP CERAMIC 1000PF
C3030	1-107-826-11	s	CAPACITOR,CHIP CERAMIC 0.1MF
C3031	1-164-937-11	s	CAPACITOR,CHIP CERAMIC 1000PF
C3032	1-107-826-11	s	CAPACITOR,CHIP CERAMIC 0.1MF
C3033	1-164-937-11	s	CAPACITOR,CHIP CERAMIC 1000PF
C3034	1-107-826-11	s	CAPACITOR,CHIP CERAMIC 0.1MF
C3035	1-164-937-11	s	CAPACITOR,CHIP CERAMIC 1000PF
C3036	1-107-826-11	s	CAPACITOR,CHIP CERAMIC 0.1MF
C3037	1-164-937-11	s	CAPACITOR,CHIP CERAMIC 1000PF
C3038	1-107-826-11	s	CAPACITOR,CHIP CERAMIC 0.1MF
C3039	1-164-937-11	s	CAPACITOR,CHIP CERAMIC 1000PF
C3040	1-107-826-11	s	CAPACITOR,CHIP CERAMIC 0.1MF
C3041	1-164-937-11	s	CAPACITOR,CHIP CERAMIC 1000PF
C3042	1-107-826-11	s	CAPACITOR,CHIP CERAMIC 0.1MF
C3043	1-164-937-11	s	CAPACITOR,CHIP CERAMIC 1000PF
C3044	1-107-826-11	s	CAPACITOR,CHIP CERAMIC 0.1MF
C3045	1-164-937-11	s	CAPACITOR,CHIP CERAMIC 1000PF
C3046	1-107-826-11	s	CAPACITOR,CHIP CERAMIC 0.1MF
C3047	1-164-937-11	s	CAPACITOR,CHIP CERAMIC 1000PF
C3048	1-164-937-11	s	CAPACITOR,CHIP CERAMIC 1000PF
C3049	1-126-399-11	s	CAPACITOR ELECT 10MF/35V(CHIP)
C3050	1-107-826-11	s	CAPACITOR,CHIP CERAMIC 0.1MF
C3051	1-164-937-11	s	CAPACITOR,CHIP CERAMIC 1000PF
C3052	1-125-777-11	s	CAPACITOR CERAMIC 0.1MF/10V
C3053	1-125-777-11	s	CAPACITOR CERAMIC 0.1MF/10V
C3054	1-107-826-11	s	CAPACITOR,CHIP CERAMIC 0.1MF
C3055	1-164-937-11	s	CAPACITOR,CHIP CERAMIC 1000PF
C3056	1-107-826-11	s	CAPACITOR,CHIP CERAMIC 0.1MF
C3057	1-125-777-11	s	CAPACITOR CERAMIC 0.1MF/10V
C3058	1-125-777-11	s	CAPACITOR CERAMIC 0.1MF/10V
C3059	1-164-937-11	s	CAPACITOR,CHIP CERAMIC 1000PF
C3060	1-107-826-11	s	CAPACITOR,CHIP CERAMIC 0.1MF
C3061	1-164-937-11	s	CAPACITOR,CHIP CERAMIC 1000PF
C3062	1-164-937-11	s	CAPACITOR,CHIP CERAMIC 1000PF
C3063	1-164-937-11	s	CAPACITOR,CHIP CERAMIC 1000PF
C3064	1-107-826-11	s	CAPACITOR,CHIP CERAMIC 0.1MF
C3065	1-164-937-11	s	CAPACITOR,CHIP CERAMIC 1000PF
C3066	1-107-826-11	s	CAPACITOR,CHIP CERAMIC 0.1MF
C3067	1-164-937-11	s	CAPACITOR,CHIP CERAMIC 1000PF
C3068	1-164-937-11	s	CAPACITOR,CHIP CERAMIC 1000PF
C3069	1-164-937-11	s	CAPACITOR,CHIP CERAMIC 1000PF
C3070	1-127-820-11	s	CAPACITOR, SQUARE CHIP 4.7MF

(CPU-357 BOARD)

Ref. No. or Q'ty	Part No.	SP	Description
C3071	1-125-777-11	s	CAPACITOR CERAMIC 0.1MF/10V
C3072	1-125-777-11	s	CAPACITOR CERAMIC 0.1MF/10V
C3073	1-127-820-11	s	CAPACITOR, SQUARE CHIP 4.7MF
C3074	1-127-820-11	s	CAPACITOR, SQUARE CHIP 4.7MF
C3075	1-127-820-11	s	CAPACITOR, SQUARE CHIP 4.7MF
C3076	1-127-820-11	s	CAPACITOR, SQUARE CHIP 4.7MF
C3077	1-125-777-11	s	CAPACITOR CERAMIC 0.1MF/10V
C3078	1-125-777-11	s	CAPACITOR CERAMIC 0.1MF/10V
C3079	1-127-820-11	s	CAPACITOR, SQUARE CHIP 4.7MF
C3080	1-126-399-11	s	CAPACITOR ELECT 10MF/35V(CHIP)
C3083	1-164-937-11	s	CAPACITOR,CHIP CERAMIC 1000PF
C3084	1-164-937-11	s	CAPACITOR,CHIP CERAMIC 1000PF
C3085	1-164-937-11	s	CAPACITOR,CHIP CERAMIC 1000PF
C3086	1-164-937-11	s	CAPACITOR,CHIP CERAMIC 1000PF
C3087	1-164-937-11	s	CAPACITOR,CHIP CERAMIC 1000PF
C3088	1-164-937-11	s	CAPACITOR,CHIP CERAMIC 1000PF
C3089	1-127-820-11	s	CAPACITOR, SQUARE CHIP 4.7MF
C3090	1-127-820-11	s	CAPACITOR, SQUARE CHIP 4.7MF
C3091	1-164-937-11	s	CAPACITOR,CHIP CERAMIC 1000PF
C3092	1-164-937-11	s	CAPACITOR,CHIP CERAMIC 1000PF
C3093	1-164-937-11	s	CAPACITOR,CHIP CERAMIC 1000PF
C3094	1-164-937-11	s	CAPACITOR,CHIP CERAMIC 1000PF
C3095	1-164-937-11	s	CAPACITOR,CHIP CERAMIC 1000PF
C3096	1-164-937-11	s	CAPACITOR,CHIP CERAMIC 1000PF
C3097	1-164-937-11	s	CAPACITOR,CHIP CERAMIC 1000PF
C3098	1-164-937-11	s	CAPACITOR,CHIP CERAMIC 1000PF
C3099	1-164-937-11	s	CAPACITOR,CHIP CERAMIC 1000PF
C3100	1-164-937-11	s	CAPACITOR,CHIP CERAMIC 1000PF
CN1200	1-816-289-11	s	JACK, MODULAR
CN1601	1-817-693-11	s	CONNECTOR, USB (B)
CN1701	1-815-031-11	s	CONNECTOR, FFC/FPC (ZIF) 24P
D1204	6-500-760-01	s	DIODE V0603MHS03NH
D1205	6-500-760-01	s	DIODE V0603MHS03NH
D1206	6-500-760-01	s	DIODE V0603MHS03NH
D1207	6-500-760-01	s	DIODE V0603MHS03NH
D1603	8-719-073-98	s	DIODE DF2S12FU(TPH3)
D1604	6-500-701-01	s	DIODE PGB0010603NR
D1605	6-500-701-01	s	DIODE PGB0010603NR
D1606	6-500-760-01	s	DIODE V0603MHS03NH
E100	1-535-877-22	s	CHIP,CHECKER (TEST POINT)
E101	1-535-877-22	s	CHIP,CHECKER (TEST POINT)
E102	1-535-877-22	s	CHIP,CHECKER (TEST POINT)
E103	1-535-877-22	s	CHIP,CHECKER (TEST POINT)
FB201	1-469-324-21	s	FERRITE, EMI (SMD) 4.7UH
FB202	1-469-324-21	s	FERRITE, EMI (SMD) 4.7UH
FB203	1-469-324-21	s	FERRITE, EMI (SMD) 4.7UH
FB900	1-469-324-21	s	FERRITE, EMI (SMD) 4.7UH
FB1000	1-469-324-21	s	FERRITE, EMI (SMD) 4.7UH
FB1001	1-469-324-21	s	FERRITE, EMI (SMD) 4.7UH
FB1200	1-469-324-21	s	FERRITE, EMI (SMD) 4.7UH
FB1400	1-469-324-21	s	FERRITE, EMI (SMD) 4.7UH
FB1401	1-469-324-21	s	FERRITE, EMI (SMD) 4.7UH
FB1500	1-469-324-21	s	FERRITE, EMI (SMD) 4.7UH
FB1501	1-469-324-21	s	FERRITE, EMI (SMD) 4.7UH
FB1601	1-469-324-21	s	FERRITE, EMI (SMD) 4.7UH
FB1602	1-469-324-21	s	FERRITE, EMI (SMD) 4.7UH
FB1603	1-400-162-21	s	FILTER, EMI
FB1604	1-400-162-21	s	FILTER, EMI

(CPU-357 BOARD)

Ref. No. or Q'ty	Part No.	SP	Description
FB1605	1-469-324-21	s	FERRITE, EMI (SMD) 4.7UH
FB1607	1-469-324-21	s	FERRITE, EMI (SMD) 4.7UH
FB1700	1-469-324-21	s	FERRITE, EMI (SMD) 4.7UH
FB1702	1-400-047-21	s	FERRITE, EMI (SMD) (1005)
FB1703	1-400-047-21	s	FERRITE, EMI (SMD) (1005)
FB1704	1-400-047-21	s	FERRITE, EMI (SMD) (1005)
FB1705	1-400-047-21	s	FERRITE, EMI (SMD) (1005)
FB1706	1-400-047-21	s	FERRITE, EMI (SMD) (1005)
FB1707	1-400-047-21	s	FERRITE, EMI (SMD) (1005)
FB1708	1-400-047-21	s	FERRITE, EMI (SMD) (1005)
FB1709	1-400-047-21	s	FERRITE, EMI (SMD) (1005)
FB1710	1-400-047-21	s	FERRITE, EMI (SMD) (1005)
FB1711	1-400-047-21	s	FERRITE, EMI (SMD) (1005)
FB1712	1-400-047-21	s	FERRITE, EMI (SMD) (1005)
FB1713	1-400-047-21	s	FERRITE, EMI (SMD) (1005)
FB1714	1-400-047-21	s	FERRITE, EMI (SMD) (1005)
FB3000	1-469-324-21	s	FERRITE, EMI (SMD) 4.7UH
FB3001	1-469-324-21	s	FERRITE, EMI (SMD) 4.7UH
IC200	6-701-042-01	s	IC LT1963EQ-E2
IC202	6-701-116-01	s	IC TPS3823-33DBVR
IC401	8-759-669-44	s	IC SN74LVC74APWR-12
IC1006	8-759-829-30	s	IC CY2305SC-1HT
IC1200	6-705-408-01	s	IC 78Q2120C-64CGT/F
IC1300	6-701-025-01	s	IC SN74LVC16244ADGGR
IC1301	6-701-025-01	s	IC SN74LVC16244ADGGR
IC1302	6-700-421-01	s	IC SN74LVCH16245ADGGR
IC1303	8-759-679-53	s	IC SN74LVC244APWR
IC1400	6-700-394-01	s	IC BA25BC0FP-TE2
IC1402	8-759-594-71	s	IC TC7SH14FU-TE85R
IC1501	8-759-692-08	s	IC MBM29DL324BE-90PFTN
IC1601	6-705-003-01	s	IC M66590FP
IC1700	8-759-549-14	s	IC SN74LV244APWR
IC1802	8-759-523-84	s	IC TC74VHC14FT (EL)
IC1803	8-759-548-96	s	IC SN74LV02APWR
IC1900	6-803-597-01	s	IC 7064BTC44-LPR5000A0V1.00
IC3000	8-759-549-14	s	IC SN74LV244APWR
IC3001	8-759-549-14	s	IC SN74LV244APWR
L1601	1-400-284-21	s	COIL, COMMON MODE CHOKE
Q201	8-729-927-99	s	TRANSISTOR 2SC4617R
R101	1-208-635-11	s	RESISTOR CHIP 10 1/16W (1005)
R102	1-208-635-11	s	RESISTOR CHIP 10 1/16W (1005)
R103	1-208-635-11	s	RESISTOR CHIP 10 1/16W (1005)
R104	1-208-635-11	s	RESISTOR CHIP 10 1/16W (1005)
R106	1-208-635-11	s	RESISTOR CHIP 10 1/16W (1005)
R107	1-208-635-11	s	RESISTOR CHIP 10 1/16W (1005)
R108	1-208-635-11	s	RESISTOR CHIP 10 1/16W (1005)
R109	1-208-635-11	s	RESISTOR CHIP 10 1/16W (1005)
R110	1-208-635-11	s	RESISTOR CHIP 10 1/16W (1005)
R112	1-208-635-11	s	RESISTOR CHIP 10 1/16W (1005)
R113	1-208-635-11	s	RESISTOR CHIP 10 1/16W (1005)
R114	1-208-635-11	s	RESISTOR CHIP 10 1/16W (1005)
R115	1-208-635-11	s	RESISTOR CHIP 10 1/16W (1005)
R116	1-208-635-11	s	RESISTOR CHIP 10 1/16W (1005)
R117	1-208-635-11	s	RESISTOR CHIP 10 1/16W (1005)
R118	1-208-635-11	s	RESISTOR CHIP 10 1/16W (1005)
R119	1-208-635-11	s	RESISTOR CHIP 10 1/16W (1005)
R200	1-218-945-11	s	RESISTOR,CHIP 220 1/16W(1005)

(CPU-357 BOARD)

Ref. No. or Q'ty	Part No.	SP	Description
R201	1-218-948-11	s	RESISTOR CHIP 390 1/16W (1005)
R202	1-208-683-11	s	RESISTOR CHIP 1K 1/16W (1005)
R203	1-218-990-11	s	RESISTOR,CHIP 0 1/16W (1005)
R204	1-218-945-11	s	RESISTOR,CHIP 220 1/16W(1005)
R205	1-218-969-11	s	RESISTOR,CHIP 22K 1/16W (1608)
R206	1-218-973-11	s	RESISTOR,CHIP 47K 1/16W (1005)
R400	1-218-973-11	s	RESISTOR,CHIP 47K 1/16W (1005)
R401	1-218-973-11	s	RESISTOR,CHIP 47K 1/16W (1005)
R402	1-218-973-11	s	RESISTOR,CHIP 47K 1/16W (1005)
R403	1-218-973-11	s	RESISTOR,CHIP 47K 1/16W (1005)
R404	1-218-973-11	s	RESISTOR,CHIP 47K 1/16W (1005)
R405	1-218-973-11	s	RESISTOR,CHIP 47K 1/16W (1005)
R406	1-218-973-11	s	RESISTOR,CHIP 47K 1/16W (1005)
R407	1-218-961-11	s	RESISTOR, CHIP 4.7K 1/16W
R500	1-208-643-11	s	RESISTOR CHIP 22 1/16W (1005)
R501	1-208-643-11	s	RESISTOR CHIP 22 1/16W (1005)
R502	1-208-643-11	s	RESISTOR CHIP 22 1/16W (1005)
R503	1-208-643-11	s	RESISTOR CHIP 22 1/16W (1005)
R504	1-208-643-11	s	RESISTOR CHIP 22 1/16W (1005)
R505	1-208-643-11	s	RESISTOR CHIP 22 1/16W (1005)
R506	1-208-643-11	s	RESISTOR CHIP 22 1/16W (1005)
R507	1-208-643-11	s	RESISTOR CHIP 22 1/16W (1005)
R508	1-208-643-11	s	RESISTOR CHIP 22 1/16W (1005)
R509	1-208-643-11	s	RESISTOR CHIP 22 1/16W (1005)
R510	1-208-643-11	s	RESISTOR CHIP 22 1/16W (1005)
R511	1-208-643-11	s	RESISTOR CHIP 22 1/16W (1005)
R512	1-208-643-11	s	RESISTOR CHIP 22 1/16W (1005)
R513	1-208-643-11	s	RESISTOR CHIP 22 1/16W (1005)
R514	1-208-643-11	s	RESISTOR CHIP 22 1/16W (1005)
R518	1-208-643-11	s	RESISTOR CHIP 22 1/16W (1005)
R519	1-208-643-11	s	RESISTOR CHIP 22 1/16W (1005)
R520	1-208-643-11	s	RESISTOR CHIP 22 1/16W (1005)
R521	1-208-643-11	s	RESISTOR CHIP 22 1/16W (1005)
R522	1-208-643-11	s	RESISTOR CHIP 22 1/16W (1005)
R523	1-208-643-11	s	RESISTOR CHIP 22 1/16W (1005)
R524	1-208-643-11	s	RESISTOR CHIP 22 1/16W (1005)
R525	1-208-643-11	s	RESISTOR CHIP 22 1/16W (1005)
R526	1-208-643-11	s	RESISTOR CHIP 22 1/16W (1005)
R527	1-208-643-11	s	RESISTOR CHIP 22 1/16W (1005)
R528	1-208-643-11	s	RESISTOR CHIP 22 1/16W (1005)
R529	1-208-643-11	s	RESISTOR CHIP 22 1/16W (1005)
R530	1-208-643-11	s	RESISTOR CHIP 22 1/16W (1005)
R531	1-208-643-11	s	RESISTOR CHIP 22 1/16W (1005)
R532	1-208-643-11	s	RESISTOR CHIP 22 1/16W (1005)
R533	1-208-643-11	s	RESISTOR CHIP 22 1/16W (1005)
R534	1-208-643-11	s	RESISTOR CHIP 22 1/16W (1005)
R535	1-208-643-11	s	RESISTOR CHIP 22 1/16W (1005)
R536	1-208-643-11	s	RESISTOR CHIP 22 1/16W (1005)
R537	1-208-643-11	s	RESISTOR CHIP 22 1/16W (1005)
R538	1-208-643-11	s	RESISTOR CHIP 22 1/16W (1005)
R539	1-208-643-11	s	RESISTOR CHIP 22 1/16W (1005)
R540	1-208-643-11	s	RESISTOR CHIP 22 1/16W (1005)
R541	1-208-643-11	s	RESISTOR CHIP 22 1/16W (1005)
R542	1-208-643-11	s	RESISTOR CHIP 22 1/16W (1005)
R543	1-208-643-11	s	RESISTOR CHIP 22 1/16W (1005)
R544	1-208-643-11	s	RESISTOR CHIP 22 1/16W (1005)
R545	1-208-643-11	s	RESISTOR CHIP 22 1/16W (1005)
R546	1-208-643-11	s	RESISTOR CHIP 22 1/16W (1005)
R547	1-208-643-11	s	RESISTOR CHIP 22 1/16W (1005)

(CPU-357 BOARD)

Ref. No. or Q'ty	Part No.	SP	Description
R548	1-208-643-11	s	RESISTOR CHIP 22 1/16W (1005)
R549	1-208-643-11	s	RESISTOR CHIP 22 1/16W (1005)
R550	1-208-643-11	s	RESISTOR CHIP 22 1/16W (1005)
R551	1-208-643-11	s	RESISTOR CHIP 22 1/16W (1005)
R552	1-208-643-11	s	RESISTOR CHIP 22 1/16W (1005)
R553	1-208-643-11	s	RESISTOR CHIP 22 1/16W (1005)
R554	1-208-643-11	s	RESISTOR CHIP 22 1/16W (1005)
R555	1-208-643-11	s	RESISTOR CHIP 22 1/16W (1005)
R556	1-208-643-11	s	RESISTOR CHIP 22 1/16W (1005)
R557	1-208-643-11	s	RESISTOR CHIP 22 1/16W (1005)
R558	1-208-643-11	s	RESISTOR CHIP 22 1/16W (1005)
R603	1-218-935-11	s	RESISTOR,CHIP 33 1/16W (1005)
R700	1-218-937-11	s	RESISTOR, CHIP 47
R701	1-218-937-11	s	RESISTOR, CHIP 47
R702	1-218-938-11	s	RESISTOR,CHIP 56 1/16W (1005)
R703	1-218-938-11	s	RESISTOR,CHIP 56 1/16W (1005)
R705	1-218-990-11	s	RESISTOR,CHIP 0 1/16W (1005)
R706	1-218-937-11	s	RESISTOR, CHIP 47
R707	1-208-643-11	s	RESISTOR CHIP 22 1/16W (1005)
R708	1-208-643-11	s	RESISTOR CHIP 22 1/16W (1005)
R709	1-208-643-11	s	RESISTOR CHIP 22 1/16W (1005)
R710	1-208-643-11	s	RESISTOR CHIP 22 1/16W (1005)
R711	1-208-643-11	s	RESISTOR CHIP 22 1/16W (1005)
R712	1-208-643-11	s	RESISTOR CHIP 22 1/16W (1005)
R713	1-208-643-11	s	RESISTOR CHIP 22 1/16W (1005)
R714	1-208-643-11	s	RESISTOR CHIP 22 1/16W (1005)
R715	1-208-643-11	s	RESISTOR CHIP 22 1/16W (1005)
R716	1-208-643-11	s	RESISTOR CHIP 22 1/16W (1005)
R717	1-208-643-11	s	RESISTOR CHIP 22 1/16W (1005)
R718	1-208-643-11	s	RESISTOR CHIP 22 1/16W (1005)
R719	1-208-643-11	s	RESISTOR CHIP 22 1/16W (1005)
R720	1-208-643-11	s	RESISTOR CHIP 22 1/16W (1005)
R721	1-208-643-11	s	RESISTOR CHIP 22 1/16W (1005)
R722	1-208-643-11	s	RESISTOR CHIP 22 1/16W (1005)
R723	1-208-643-11	s	RESISTOR CHIP 22 1/16W (1005)
R724	1-208-643-11	s	RESISTOR CHIP 22 1/16W (1005)
R725	1-208-643-11	s	RESISTOR CHIP 22 1/16W (1005)
R726	1-208-643-11	s	RESISTOR CHIP 22 1/16W (1005)
R727	1-208-643-11	s	RESISTOR CHIP 22 1/16W (1005)
R728	1-208-643-11	s	RESISTOR CHIP 22 1/16W (1005)
R729	1-208-643-11	s	RESISTOR CHIP 22 1/16W (1005)
R730	1-208-643-11	s	RESISTOR CHIP 22 1/16W (1005)
R731	1-208-643-11	s	RESISTOR CHIP 22 1/16W (1005)
R732	1-208-643-11	s	RESISTOR CHIP 22 1/16W (1005)
R733	1-208-643-11	s	RESISTOR CHIP 22 1/16W (1005)
R734	1-208-643-11	s	RESISTOR CHIP 22 1/16W (1005)
R735	1-208-643-11	s	RESISTOR CHIP 22 1/16W (1005)
R736	1-208-643-11	s	RESISTOR CHIP 22 1/16W (1005)
R737	1-208-643-11	s	RESISTOR CHIP 22 1/16W (1005)
R738	1-208-643-11	s	RESISTOR CHIP 22 1/16W (1005)
R739	1-208-643-11	s	RESISTOR CHIP 22 1/16W (1005)
R740	1-208-643-11	s	RESISTOR CHIP 22 1/16W (1005)
R741	1-208-643-11	s	RESISTOR CHIP 22 1/16W (1005)
R742	1-208-643-11	s	RESISTOR CHIP 22 1/16W (1005)
R743	1-208-643-11	s	RESISTOR CHIP 22 1/16W (1005)
R744	1-208-643-11	s	RESISTOR CHIP 22 1/16W (1005)
R745	1-218-938-11	s	RESISTOR,CHIP 56 1/16W (1005)
R746	1-218-945-11	s	RESISTOR,CHIP 220 1/16W(1005)
R747	1-218-961-11	s	RESISTOR, CHIP 4.7K 1/16W

(CPU-357 BOARD)

Ref. No. or Q'ty	Part No.	SP	Description
R748	1-218-961-11	s	RESISTOR, CHIP 4.7K 1/16W
R804	1-218-990-11	s	RESISTOR,CHIP 0 1/16W (1005)
R805	1-218-990-11	s	RESISTOR,CHIP 0 1/16W (1005)
R806	1-218-990-11	s	RESISTOR,CHIP 0 1/16W (1005)
R1000	1-218-965-11	s	RESISTOR, CHIP 10K 1/16W
R1001	1-208-643-11	s	RESISTOR CHIP 22 1/16W (1005)
R1002	1-208-643-11	s	RESISTOR CHIP 22 1/16W (1005)
R1003	1-208-643-11	s	RESISTOR CHIP 22 1/16W (1005)
R1004	1-208-643-11	s	RESISTOR CHIP 22 1/16W (1005)
R1005	1-208-643-11	s	RESISTOR CHIP 22 1/16W (1005)
R1006	1-208-643-11	s	RESISTOR CHIP 22 1/16W (1005)
R1007	1-208-643-11	s	RESISTOR CHIP 22 1/16W (1005)
R1008	1-208-643-11	s	RESISTOR CHIP 22 1/16W (1005)
R1009	1-208-643-11	s	RESISTOR CHIP 22 1/16W (1005)
R1010	1-208-643-11	s	RESISTOR CHIP 22 1/16W (1005)
R1011	1-208-643-11	s	RESISTOR CHIP 22 1/16W (1005)
R1012	1-208-643-11	s	RESISTOR CHIP 22 1/16W (1005)
R1013	1-208-643-11	s	RESISTOR CHIP 22 1/16W (1005)
R1014	1-208-643-11	s	RESISTOR CHIP 22 1/16W (1005)
R1015	1-208-643-11	s	RESISTOR CHIP 22 1/16W (1005)
R1016	1-208-643-11	s	RESISTOR CHIP 22 1/16W (1005)
R1017	1-208-643-11	s	RESISTOR CHIP 22 1/16W (1005)
R1018	1-208-643-11	s	RESISTOR CHIP 22 1/16W (1005)
R1019	1-208-643-11	s	RESISTOR CHIP 22 1/16W (1005)
R1020	1-208-643-11	s	RESISTOR CHIP 22 1/16W (1005)
R1021	1-208-643-11	s	RESISTOR CHIP 22 1/16W (1005)
R1022	1-208-643-11	s	RESISTOR CHIP 22 1/16W (1005)
R1023	1-208-643-11	s	RESISTOR CHIP 22 1/16W (1005)
R1024	1-208-643-11	s	RESISTOR CHIP 22 1/16W (1005)
R1025	1-208-643-11	s	RESISTOR CHIP 22 1/16W (1005)
R1026	1-208-643-11	s	RESISTOR CHIP 22 1/16W (1005)
R1027	1-208-643-11	s	RESISTOR CHIP 22 1/16W (1005)
R1028	1-208-643-11	s	RESISTOR CHIP 22 1/16W (1005)
R1029	1-208-643-11	s	RESISTOR CHIP 22 1/16W (1005)
R1030	1-208-643-11	s	RESISTOR CHIP 22 1/16W (1005)
R1031	1-208-643-11	s	RESISTOR CHIP 22 1/16W (1005)
R1032	1-208-643-11	s	RESISTOR CHIP 22 1/16W (1005)
R1097	1-218-937-11	s	RESISTOR, CHIP 47
R1200	1-218-990-11	s	RESISTOR,CHIP 0 1/16W (1005)
R1201	1-218-990-11	s	RESISTOR,CHIP 0 1/16W (1005)
R1202	1-218-990-11	s	RESISTOR,CHIP 0 1/16W (1005)
R1203	1-218-990-11	s	RESISTOR,CHIP 0 1/16W (1005)
R1204	1-218-990-11	s	RESISTOR,CHIP 0 1/16W (1005)
R1205	1-218-990-11	s	RESISTOR,CHIP 0 1/16W (1005)
R1206	1-218-990-11	s	RESISTOR,CHIP 0 1/16W (1005)
R1215	1-218-973-11	s	RESISTOR,CHIP 47K 1/16W (1005)
R1216	1-218-941-81	s	RESISTOR,CHIP 100,1/16W (1005)
R1217	1-218-941-81	s	RESISTOR,CHIP 100,1/16W (1005)
R1218	1-218-961-11	s	RESISTOR, CHIP 4.7K 1/16W
R1219	1-218-935-11	s	RESISTOR,CHIP 33 1/16W (1005)
R1224	1-218-973-11	s	RESISTOR,CHIP 47K 1/16W (1005)
R1225	1-218-973-11	s	RESISTOR,CHIP 47K 1/16W (1005)
R1226	1-218-973-11	s	RESISTOR,CHIP 47K 1/16W (1005)
R1227	1-218-973-11	s	RESISTOR,CHIP 47K 1/16W (1005)
R1234	1-218-990-11	s	RESISTOR,CHIP 0 1/16W (1005)
R1235	1-218-990-11	s	RESISTOR,CHIP 0 1/16W (1005)
R1236	1-208-721-11	s	RESISTOR CHIP 39K 1/16W (1005)
R1237	1-208-652-11	s	RESISTOR CHIP 51 1/16W (1005)
R1238	1-208-652-11	s	RESISTOR CHIP 51 1/16W (1005)

(CPU-357 BOARD)

Ref. No. or Q'ty	Part No.	SP	Description
R1239	1-208-652-11	s	RESISTOR CHIP 51 1/16W (1005)
R1240	1-208-652-11	s	RESISTOR CHIP 51 1/16W (1005)
R1243	1-208-860-11	s	RESISTOR CHIP 75 1/16W (1005)
R1244	1-208-860-11	s	RESISTOR CHIP 75 1/16W (1005)
R1245	1-208-860-11	s	RESISTOR CHIP 75 1/16W (1005)
R1246	1-208-860-11	s	RESISTOR CHIP 75 1/16W (1005)
R1247	1-208-860-11	s	RESISTOR CHIP 75 1/16W (1005)
R1248	1-208-860-11	s	RESISTOR CHIP 75 1/16W (1005)
R1249	1-218-945-11	s	RESISTOR,CHIP 220 1/16W(1005)
R1250	1-220-196-11	s	RESISTOR, CHIP 13K (1005)
R1251	1-218-941-81	s	RESISTOR,CHIP 100,1/16W (1005)
R1252	1-218-941-81	s	RESISTOR,CHIP 100,1/16W (1005)
R1253	1-218-941-81	s	RESISTOR,CHIP 100,1/16W (1005)
R1254	1-218-941-81	s	RESISTOR,CHIP 100,1/16W (1005)
R1255	1-218-941-81	s	RESISTOR,CHIP 100,1/16W (1005)
R1256	1-220-876-11	s	RESISTOR CHIP 18 1/16W(1005)
R1261	1-218-941-81	s	RESISTOR,CHIP 100,1/16W (1005)
R1262	1-218-941-81	s	RESISTOR,CHIP 100,1/16W (1005)
R1263	1-218-941-81	s	RESISTOR,CHIP 100,1/16W (1005)
R1302	1-218-935-11	s	RESISTOR,CHIP 33 1/16W (1005)
R1303	1-218-935-11	s	RESISTOR,CHIP 33 1/16W (1005)
R1404	1-218-973-11	s	RESISTOR,CHIP 47K 1/16W (1005)
R1405	1-218-973-11	s	RESISTOR,CHIP 47K 1/16W (1005)
R1406	1-218-973-11	s	RESISTOR,CHIP 47K 1/16W (1005)
R1407	1-218-973-11	s	RESISTOR,CHIP 47K 1/16W (1005)
R1408	1-218-945-11	s	RESISTOR,CHIP 220 1/16W(1005)
R1409	1-218-973-11	s	RESISTOR,CHIP 47K 1/16W (1005)
R1410	1-218-973-11	s	RESISTOR,CHIP 47K 1/16W (1005)
R1411	1-218-973-11	s	RESISTOR,CHIP 47K 1/16W (1005)
R1412	1-218-973-11	s	RESISTOR,CHIP 47K 1/16W (1005)
R1413	1-218-973-11	s	RESISTOR,CHIP 47K 1/16W (1005)
R1415	1-218-973-11	s	RESISTOR,CHIP 47K 1/16W (1005)
R1416	1-218-973-11	s	RESISTOR,CHIP 47K 1/16W (1005)
R1417	1-218-973-11	s	RESISTOR,CHIP 47K 1/16W (1005)
R1421	1-218-973-11	s	RESISTOR,CHIP 47K 1/16W (1005)
R1422	1-218-990-11	s	RESISTOR,CHIP 0 1/16W (1005)
R1423	1-218-973-11	s	RESISTOR,CHIP 47K 1/16W (1005)
R1500	1-218-973-11	s	RESISTOR,CHIP 47K 1/16W (1005)
R1501	1-218-973-11	s	RESISTOR,CHIP 47K 1/16W (1005)
R1503	1-218-945-11	s	RESISTOR,CHIP 220 1/16W(1005)
R1504	1-218-973-11	s	RESISTOR,CHIP 47K 1/16W (1005)
R1601	1-218-961-11	s	RESISTOR, CHIP 4.7K 1/16W
R1602	1-218-961-11	s	RESISTOR, CHIP 4.7K 1/16W
R1603	1-218-945-11	s	RESISTOR,CHIP 220 1/16W(1005)
R1604	1-218-935-11	s	RESISTOR,CHIP 33 1/16W (1005)
R1606	1-220-885-11	s	RES, CHIP 43 (1005)
R1607	1-220-885-11	s	RES, CHIP 43 (1005)
R1608	1-218-955-11	s	RESISTOR, CHIP 1.5K
R1609	1-218-849-11	s	RESISTOR,CHIP 1.2K 1/10W(1608)
R1612	1-218-965-11	s	RESISTOR, CHIP 10K 1/16W
R1613	1-218-965-11	s	RESISTOR, CHIP 10K 1/16W
R1614	1-218-965-11	s	RESISTOR, CHIP 10K 1/16W
R1615	1-218-965-11	s	RESISTOR, CHIP 10K 1/16W
R1616	1-218-965-11	s	RESISTOR, CHIP 10K 1/16W
R1617	1-218-965-11	s	RESISTOR, CHIP 10K 1/16W
R1618	1-218-965-11	s	RESISTOR, CHIP 10K 1/16W
R1619	1-218-965-11	s	RESISTOR, CHIP 10K 1/16W
R1700	1-218-973-11	s	RESISTOR,CHIP 47K 1/16W (1005)
R1701	1-218-973-11	s	RESISTOR,CHIP 47K 1/16W (1005)

(CPU-357 BOARD)

Ref. No. or Q'ty	Part No.	SP	Description
R1702	1-218-973-11	s	RESISTOR,CHIP 47K 1/16W (1005)
R1703	1-218-973-11	s	RESISTOR,CHIP 47K 1/16W (1005)
R1704	1-218-973-11	s	RESISTOR,CHIP 47K 1/16W (1005)
R1705	1-218-973-11	s	RESISTOR,CHIP 47K 1/16W (1005)
R1706	1-218-973-11	s	RESISTOR,CHIP 47K 1/16W (1005)
R1708	1-218-973-11	s	RESISTOR,CHIP 47K 1/16W (1005)
R1709	1-218-973-11	s	RESISTOR,CHIP 47K 1/16W (1005)
R1710	1-218-973-11	s	RESISTOR,CHIP 47K 1/16W (1005)
R1800	1-218-961-11	s	RESISTOR, CHIP 4.7K 1/16W
R1802	1-218-961-11	s	RESISTOR, CHIP 4.7K 1/16W
R1808	1-218-973-11	s	RESISTOR,CHIP 47K 1/16W (1005)
R1811	1-218-961-11	s	RESISTOR, CHIP 4.7K 1/16W
R1812	1-218-945-11	s	RESISTOR,CHIP 220 1/16W(1005)
R1900	1-218-961-11	s	RESISTOR, CHIP 4.7K 1/16W
R1901	1-218-945-11	s	RESISTOR,CHIP 220 1/16W(1005)
R1902	1-218-973-11	s	RESISTOR,CHIP 47K 1/16W (1005)
R1907	1-218-990-11	s	RESISTOR,CHIP 0 1/16W (1005)
R1908	1-218-973-11	s	RESISTOR,CHIP 47K 1/16W (1005)
R1909	1-218-990-11	s	RESISTOR,CHIP 0 1/16W (1005)
R1911	1-218-973-11	s	RESISTOR,CHIP 47K 1/16W (1005)
R1912	1-218-990-11	s	RESISTOR,CHIP 0 1/16W (1005)
R1914	1-218-973-11	s	RESISTOR,CHIP 47K 1/16W (1005)
R3001	1-218-965-11	s	RESISTOR, CHIP 10K 1/16W
R3003	1-218-990-11	s	RESISTOR,CHIP 0 1/16W (1005)
R3004	1-218-971-11	s	RESISTOR,CHIP 33K 1/16W (1005)
R3006	1-218-965-11	s	RESISTOR, CHIP 10K 1/16W
R3008	1-218-990-11	s	RESISTOR,CHIP 0 1/16W (1005)
R3011	1-218-965-11	s	RESISTOR, CHIP 10K 1/16W
R3015	1-218-990-11	s	RESISTOR,CHIP 0 1/16W (1005)
R3016	1-218-973-11	s	RESISTOR,CHIP 47K 1/16W (1005)
R3017	1-218-973-11	s	RESISTOR,CHIP 47K 1/16W (1005)
R3022	1-218-973-11	s	RESISTOR,CHIP 47K 1/16W (1005)
R3023	1-218-945-11	s	RESISTOR,CHIP 220 1/16W(1005)
R3024	1-218-945-11	s	RESISTOR,CHIP 220 1/16W(1005)
R3025	1-218-945-11	s	RESISTOR,CHIP 220 1/16W(1005)
R3026	1-218-945-11	s	RESISTOR,CHIP 220 1/16W(1005)
R3027	1-218-945-11	s	RESISTOR,CHIP 220 1/16W(1005)
R3028	1-218-945-11	s	RESISTOR,CHIP 220 1/16W(1005)
R3029	1-218-945-11	s	RESISTOR,CHIP 220 1/16W(1005)
R3030	1-218-945-11	s	RESISTOR,CHIP 220 1/16W(1005)
R3031	1-218-945-11	s	RESISTOR,CHIP 220 1/16W(1005)
R3033	1-218-990-11	s	RESISTOR,CHIP 0 1/16W (1005)
R3034	1-218-990-11	s	RESISTOR,CHIP 0 1/16W (1005)
R3035	1-218-990-11	s	RESISTOR,CHIP 0 1/16W (1005)
R3036	1-218-973-11	s	RESISTOR,CHIP 47K 1/16W (1005)
R3040	1-218-965-11	s	RESISTOR, CHIP 10K 1/16W
R3041	1-208-635-11	s	RESISTOR CHIP 10 1/16W (1005)
R3042	1-208-635-11	s	RESISTOR CHIP 10 1/16W (1005)
R3043	1-208-635-11	s	RESISTOR CHIP 10 1/16W (1005)
R3044	1-208-635-11	s	RESISTOR CHIP 10 1/16W (1005)
R3045	1-208-635-11	s	RESISTOR CHIP 10 1/16W (1005)
R3046	1-208-635-11	s	RESISTOR CHIP 10 1/16W (1005)
R3047	1-208-635-11	s	RESISTOR CHIP 10 1/16W (1005)
R3048	1-208-635-11	s	RESISTOR CHIP 10 1/16W (1005)
R3049	1-208-635-11	s	RESISTOR CHIP 10 1/16W (1005)
R3050	1-208-635-11	s	RESISTOR CHIP 10 1/16W (1005)
R3051	1-208-635-11	s	RESISTOR CHIP 10 1/16W (1005)
R3052	1-208-635-11	s	RESISTOR CHIP 10 1/16W (1005)
R3053	1-208-635-11	s	RESISTOR CHIP 10 1/16W (1005)

(CPU-357 BOARD)

Ref. No. or Q'ty	Part No.	SP	Description
R3054	1-208-635-11	s	RESISTOR CHIP 10 1/16W (1005)
R3055	1-208-635-11	s	RESISTOR CHIP 10 1/16W (1005)
R3056	1-208-635-11	s	RESISTOR CHIP 10 1/16W (1005)
R3057	1-208-635-11	s	RESISTOR CHIP 10 1/16W (1005)
R3058	1-208-635-11	s	RESISTOR CHIP 10 1/16W (1005)
R3059	1-208-635-11	s	RESISTOR CHIP 10 1/16W (1005)
R3060	1-208-635-11	s	RESISTOR CHIP 10 1/16W (1005)
R3061	1-208-635-11	s	RESISTOR CHIP 10 1/16W (1005)
R3063	1-208-635-11	s	RESISTOR CHIP 10 1/16W (1005)
R3064	1-208-635-11	s	RESISTOR CHIP 10 1/16W (1005)
R3065	1-208-635-11	s	RESISTOR CHIP 10 1/16W (1005)
R3066	1-208-635-11	s	RESISTOR CHIP 10 1/16W (1005)
R3067	1-208-635-11	s	RESISTOR CHIP 10 1/16W (1005)
R3068	1-208-635-11	s	RESISTOR CHIP 10 1/16W (1005)
R3069	1-208-635-11	s	RESISTOR CHIP 10 1/16W (1005)
R3070	1-218-935-11	s	RESISTOR,CHIP 33 1/16W (1005)
R3071	1-208-635-11	s	RESISTOR CHIP 10 1/16W (1005)
R3072	1-208-635-11	s	RESISTOR CHIP 10 1/16W (1005)
R3073	1-208-635-11	s	RESISTOR CHIP 10 1/16W (1005)
R3074	1-208-635-11	s	RESISTOR CHIP 10 1/16W (1005)
R3075	1-208-635-11	s	RESISTOR CHIP 10 1/16W (1005)
R3078	1-208-635-11	s	RESISTOR CHIP 10 1/16W (1005)
R3079	1-208-635-11	s	RESISTOR CHIP 10 1/16W (1005)
R3080	1-208-635-11	s	RESISTOR CHIP 10 1/16W (1005)
R3081	1-208-635-11	s	RESISTOR CHIP 10 1/16W (1005)
R3082	1-208-635-11	s	RESISTOR CHIP 10 1/16W (1005)
R3083	1-208-635-11	s	RESISTOR CHIP 10 1/16W (1005)
R3084	1-208-635-11	s	RESISTOR CHIP 10 1/16W (1005)
R3085	1-208-635-11	s	RESISTOR CHIP 10 1/16W (1005)
R3086	1-208-635-11	s	RESISTOR CHIP 10 1/16W (1005)
R3087	1-208-635-11	s	RESISTOR CHIP 10 1/16W (1005)
R3088	1-208-635-11	s	RESISTOR CHIP 10 1/16W (1005)
R3089	1-208-635-11	s	RESISTOR CHIP 10 1/16W (1005)
R3090	1-208-635-11	s	RESISTOR CHIP 10 1/16W (1005)
R3091	1-208-635-11	s	RESISTOR CHIP 10 1/16W (1005)
R3092	1-208-635-11	s	RESISTOR CHIP 10 1/16W (1005)
R3093	1-208-635-11	s	RESISTOR CHIP 10 1/16W (1005)
R3094	1-208-635-11	s	RESISTOR CHIP 10 1/16W (1005)
R3095	1-208-635-11	s	RESISTOR CHIP 10 1/16W (1005)
R3096	1-208-635-11	s	RESISTOR CHIP 10 1/16W (1005)
R3097	1-208-635-11	s	RESISTOR CHIP 10 1/16W (1005)
R3098	1-218-973-11	s	RESISTOR,CHIP 47K 1/16W (1005)
R3099	1-218-973-11	s	RESISTOR,CHIP 47K 1/16W (1005)
R3100	1-208-635-11	s	RESISTOR CHIP 10 1/16W (1005)
R3101	1-208-635-11	s	RESISTOR CHIP 10 1/16W (1005)
R3102	1-208-635-11	s	RESISTOR CHIP 10 1/16W (1005)
R3103	1-208-635-11	s	RESISTOR CHIP 10 1/16W (1005)
R3104	1-208-635-11	s	RESISTOR CHIP 10 1/16W (1005)
R3105	1-208-635-11	s	RESISTOR CHIP 10 1/16W (1005)
R3106	1-208-635-11	s	RESISTOR CHIP 10 1/16W (1005)
R3107	1-208-635-11	s	RESISTOR CHIP 10 1/16W (1005)
R3108	1-218-961-11	s	RESISTOR, CHIP 4.7K 1/16W
R3109	1-208-635-11	s	RESISTOR CHIP 10 1/16W (1005)
R3110	1-208-635-11	s	RESISTOR CHIP 10 1/16W (1005)
R3111	1-208-635-11	s	RESISTOR CHIP 10 1/16W (1005)
R3112	1-208-635-11	s	RESISTOR CHIP 10 1/16W (1005)
R3113	1-208-635-11	s	RESISTOR CHIP 10 1/16W (1005)
R3114	1-208-635-11	s	RESISTOR CHIP 10 1/16W (1005)
R3115	1-208-635-11	s	RESISTOR CHIP 10 1/16W (1005)

(CPU-357 BOARD)

Ref. No. or Q'ty	Part No.	SP	Description
R3116	1-208-635-11	s	RESISTOR CHIP 10 1/16W (1005)
R3117	1-208-635-11	s	RESISTOR CHIP 10 1/16W (1005)
R3118	1-208-635-11	s	RESISTOR CHIP 10 1/16W (1005)
R3119	1-208-635-11	s	RESISTOR CHIP 10 1/16W (1005)
R3120	1-218-965-11	s	RESISTOR, CHIP 10K 1/16W
R3121	1-208-635-11	s	RESISTOR CHIP 10 1/16W (1005)
R3122	1-208-635-11	s	RESISTOR CHIP 10 1/16W (1005)
R3123	1-208-635-11	s	RESISTOR CHIP 10 1/16W (1005)
R3124	1-208-635-11	s	RESISTOR CHIP 10 1/16W (1005)
R3125	1-208-635-11	s	RESISTOR CHIP 10 1/16W (1005)
R3126	1-208-635-11	s	RESISTOR CHIP 10 1/16W (1005)
R3127	1-208-635-11	s	RESISTOR CHIP 10 1/16W (1005)
R3130	1-208-635-11	s	RESISTOR CHIP 10 1/16W (1005)
R3131	1-208-635-11	s	RESISTOR CHIP 10 1/16W (1005)
R3132	1-208-635-11	s	RESISTOR CHIP 10 1/16W (1005)
R3133	1-208-635-11	s	RESISTOR CHIP 10 1/16W (1005)
R3134	1-208-635-11	s	RESISTOR CHIP 10 1/16W (1005)
R3135	1-208-635-11	s	RESISTOR CHIP 10 1/16W (1005)
R3136	1-208-635-11	s	RESISTOR CHIP 10 1/16W (1005)
R3137	1-208-635-11	s	RESISTOR CHIP 10 1/16W (1005)
R3138	1-208-635-11	s	RESISTOR CHIP 10 1/16W (1005)
R3140	1-208-635-11	s	RESISTOR CHIP 10 1/16W (1005)
R3143	1-208-635-11	s	RESISTOR CHIP 10 1/16W (1005)
R3144	1-208-635-11	s	RESISTOR CHIP 10 1/16W (1005)
R3145	1-208-635-11	s	RESISTOR CHIP 10 1/16W (1005)
R3146	1-208-635-11	s	RESISTOR CHIP 10 1/16W (1005)
R3147	1-208-635-11	s	RESISTOR CHIP 10 1/16W (1005)
R3148	1-208-635-11	s	RESISTOR CHIP 10 1/16W (1005)
R3149	1-208-635-11	s	RESISTOR CHIP 10 1/16W (1005)
R3150	1-208-635-11	s	RESISTOR CHIP 10 1/16W (1005)
R3151	1-208-635-11	s	RESISTOR CHIP 10 1/16W (1005)
R3152	1-208-635-11	s	RESISTOR CHIP 10 1/16W (1005)
R3153	1-208-635-11	s	RESISTOR CHIP 10 1/16W (1005)
R3155	1-208-635-11	s	RESISTOR CHIP 10 1/16W (1005)
R3156	1-208-635-11	s	RESISTOR CHIP 10 1/16W (1005)
R3157	1-208-635-11	s	RESISTOR CHIP 10 1/16W (1005)
R3158	1-208-635-11	s	RESISTOR CHIP 10 1/16W (1005)
R3159	1-208-635-11	s	RESISTOR CHIP 10 1/16W (1005)
R3160	1-208-635-11	s	RESISTOR CHIP 10 1/16W (1005)
R3162	1-208-635-11	s	RESISTOR CHIP 10 1/16W (1005)
R3163	1-218-973-11	s	RESISTOR,CHIP 47K 1/16W (1005)
R3165	1-208-635-11	s	RESISTOR CHIP 10 1/16W (1005)
R3166	1-208-635-11	s	RESISTOR CHIP 10 1/16W (1005)
R3167	1-208-635-11	s	RESISTOR CHIP 10 1/16W (1005)
R3168	1-208-635-11	s	RESISTOR CHIP 10 1/16W (1005)
R3169	1-208-635-11	s	RESISTOR CHIP 10 1/16W (1005)
R3170	1-208-635-11	s	RESISTOR CHIP 10 1/16W (1005)
R3171	1-208-635-11	s	RESISTOR CHIP 10 1/16W (1005)
R3172	1-208-635-11	s	RESISTOR CHIP 10 1/16W (1005)
R3173	1-208-635-11	s	RESISTOR CHIP 10 1/16W (1005)
R3174	1-218-965-11	s	RESISTOR, CHIP 10K 1/16W
R3175	1-218-965-11	s	RESISTOR, CHIP 10K 1/16W
R3176	1-218-965-11	s	RESISTOR, CHIP 10K 1/16W
R3177	1-218-973-11	s	RESISTOR,CHIP 47K 1/16W (1005)
R3178	1-218-973-11	s	RESISTOR,CHIP 47K 1/16W (1005)
R3180	1-218-945-11	s	RESISTOR,CHIP 220 1/16W(1005)
R3181	1-218-935-11	s	RESISTOR,CHIP 33 1/16W (1005)
RB101	1-234-369-21	s	RES, NETWORK 10X4 (1005)

(CPU-357 BOARD)

Ref. No. or Q'ty	Part No.	SP	Description
RB102	1-234-369-21	s	RES, NETWORK 10X4 (1005)
RB103	1-234-369-21	s	RES, NETWORK 10X4 (1005)
RB104	1-234-369-21	s	RES, NETWORK 10X4 (1005)
RB105	1-234-369-21	s	RES, NETWORK 10X4 (1005)
RB106	1-234-369-21	s	RES, NETWORK 10X4 (1005)
RB107	1-234-369-21	s	RES, NETWORK 10X4 (1005)
RB108	1-234-369-21	s	RES, NETWORK 10X4 (1005)
RB109	1-234-369-21	s	RES, NETWORK 10X4 (1005)
RB110	1-234-369-21	s	RES, NETWORK 10X4 (1005)
RB111	1-234-369-21	s	RES, NETWORK 10X4 (1005)
RB112	1-234-369-21	s	RES, NETWORK 10X4 (1005)
RB113	1-234-369-21	s	RES, NETWORK 10X4 (1005)
RB114	1-234-369-21	s	RES, NETWORK 10X4 (1005)
RB115	1-234-369-21	s	RES, NETWORK 10X4 (1005)
RB116	1-234-369-21	s	RES, NETWORK 10X4 (1005)
RB117	1-234-369-21	s	RES, NETWORK 10X4 (1005)
RB118	1-234-369-21	s	RES, NETWORK 10X4 (1005)
RB119	1-234-369-21	s	RES, NETWORK 10X4 (1005)
RB120	1-234-369-21	s	RES, NETWORK 10X4 (1005)
RB121	1-234-369-21	s	RES, NETWORK 10X4 (1005)
RB122	1-234-369-21	s	RES, NETWORK 10X4 (1005)
RB123	1-234-369-21	s	RES, NETWORK 10X4 (1005)
RB124	1-234-369-21	s	RES, NETWORK 10X4 (1005)
RB125	1-234-369-21	s	RES, NETWORK 10X4 (1005)
RB126	1-234-369-21	s	RES, NETWORK 10X4 (1005)
RB400	1-234-380-11	s	RESISTOE,NETWORK 47KX4 (1005)
RB401	1-234-380-11	s	RESISTOE,NETWORK 47KX4 (1005)
RB402	1-234-380-11	s	RESISTOE,NETWORK 47KX4 (1005)
RB403	1-234-380-11	s	RESISTOE,NETWORK 47KX4 (1005)
RB500	1-234-380-11	s	RESISTOE,NETWORK 47KX4 (1005)
RB501	1-234-380-11	s	RESISTOE,NETWORK 47KX4 (1005)
RB502	1-234-380-11	s	RESISTOE,NETWORK 47KX4 (1005)
RB503	1-234-380-11	s	RESISTOE,NETWORK 47KX4 (1005)
RB504	1-234-380-11	s	RESISTOE,NETWORK 47KX4 (1005)
RB505	1-234-380-11	s	RESISTOE,NETWORK 47KX4 (1005)
RB506	1-234-380-11	s	RESISTOE,NETWORK 47KX4 (1005)
RB507	1-234-380-11	s	RESISTOE,NETWORK 47KX4 (1005)
RB600	1-234-380-11	s	RESISTOE,NETWORK 47KX4 (1005)
RB601	1-234-380-11	s	RESISTOE,NETWORK 47KX4 (1005)
RB602	1-234-380-11	s	RESISTOE,NETWORK 47KX4 (1005)
RB603	1-234-380-11	s	RESISTOE,NETWORK 47KX4 (1005)
RB604	1-234-380-11	s	RESISTOE,NETWORK 47KX4 (1005)
RB605	1-234-380-11	s	RESISTOE,NETWORK 47KX4 (1005)
RB606	1-234-380-11	s	RESISTOE,NETWORK 47KX4 (1005)
RB607	1-234-380-11	s	RESISTOE,NETWORK 47KX4 (1005)
RB608	1-234-380-11	s	RESISTOE,NETWORK 47KX4 (1005)
RB609	1-234-380-11	s	RESISTOE,NETWORK 47KX4 (1005)
RB610	1-234-380-11	s	RESISTOE,NETWORK 47KX4 (1005)
RB611	1-234-380-11	s	RESISTOE,NETWORK 47KX4 (1005)
RB612	1-234-380-11	s	RESISTOE,NETWORK 47KX4 (1005)
RB613	1-234-380-11	s	RESISTOE,NETWORK 47KX4 (1005)
RB1300	1-234-380-11	s	RESISTOE,NETWORK 47KX4 (1005)
RB1301	1-234-380-11	s	RESISTOE,NETWORK 47KX4 (1005)
RB1302	1-234-380-11	s	RESISTOE,NETWORK 47KX4 (1005)
RB1303	1-234-380-11	s	RESISTOE,NETWORK 47KX4 (1005)
RB1304	1-234-380-11	s	RESISTOE,NETWORK 47KX4 (1005)
RB1400	1-234-380-11	s	RESISTOE,NETWORK 47KX4 (1005)
RB1401	1-234-380-11	s	RESISTOE,NETWORK 47KX4 (1005)
RB1402	1-234-380-11	s	RESISTOE,NETWORK 47KX4 (1005)

(CPU-357 BOARD)

Ref. No. or Q'ty	Part No.	SP	Description	
RB1403	1-234-380-11	s	RESISTOE,NETWORK 47KX4	(1005)
RB1404	1-234-380-11	s	RESISTOE,NETWORK 47KX4	(1005)
RB1601	1-234-380-11	s	RESISTOE,NETWORK 47KX4	(1005)
RB1602	1-234-380-11	s	RESISTOE,NETWORK 47KX4	(1005)
RB1603	1-234-380-11	s	RESISTOE,NETWORK 47KX4	(1005)
RB1604	1-234-380-11	s	RESISTOE,NETWORK 47KX4	(1005)
RB3000	1-234-380-11	s	RESISTOE,NETWORK 47KX4	(1005)
RB3001	1-234-380-11	s	RESISTOE,NETWORK 47KX4	(1005)
RB3006	1-234-380-11	s	RESISTOE,NETWORK 47KX4	(1005)
RB3007	1-234-380-11	s	RESISTOE,NETWORK 47KX4	(1005)
RB3008	1-234-380-11	s	RESISTOE,NETWORK 47KX4	(1005)
RB3009	1-234-380-11	s	RESISTOE,NETWORK 47KX4	(1005)
RB3010	1-234-380-11	s	RESISTOE,NETWORK 47KX4	(1005)
RB3011	1-234-380-11	s	RESISTOE,NETWORK 47KX4	(1005)
RB3012	1-234-380-11	s	RESISTOE,NETWORK 47KX4	(1005)
RB3013	1-234-380-11	s	RESISTOE,NETWORK 47KX4	(1005)
RB3014	1-234-380-11	s	RESISTOE,NETWORK 47KX4	(1005)
RB3015	1-234-380-11	s	RESISTOE,NETWORK 47KX4	(1005)
RB3016	1-234-380-11	s	RESISTOE,NETWORK 47KX4	(1005)
RB3017	1-234-380-11	s	RESISTOE,NETWORK 47KX4	(1005)
T1200	1-437-527-41	s	TRANSFORMER, PULSE	
THP700	1-533-817-21	s	THERMISTOR	
TP100	1-535-877-22	s	CHIP,CHECKER (TEST POINT)	
VDR161	1-801-922-11	s	VARISTOR, CHIP	
X700	1-795-176-21	s	OSCILLATOR, CRYSTAL	
X1200	1-795-457-21	s	OSCILLATOR, CRYSTAL (SMD)	
X1601	1-795-904-21	s	OSCILLATOR, CRYSTAL	

FP-138 BOARD

Ref. No. or Q'ty	Part No.	SP	Description	
C101	1-125-827-11	s	CAPACITOR,CERAMIC 1MF/25V	
C102	1-126-396-11	s	CAPACITOR,ELECT 47MF/16V(CHIP)	
C103	1-126-396-11	s	CAPACITOR,ELECT 47MF/16V(CHIP)	
C104	1-125-777-11	s	CAPACITOR CERAMIC 0.1MF/10V	
C105	1-125-777-11	s	CAPACITOR CERAMIC 0.1MF/10V	
C106	1-125-777-11	s	CAPACITOR CERAMIC 0.1MF/10V	
C107	1-127-820-11	s	CAPACITOR, SQUARE CHIP 4.7MF	
C108	1-164-874-11	s	CAPACITOR,CHIP CERAMIC 100PF	
C109	1-164-874-11	s	CAPACITOR,CHIP CERAMIC 100PF	
C110	1-125-777-11	s	CAPACITOR CERAMIC 0.1MF/10V	
C111	1-125-827-11	s	CAPACITOR,CERAMIC 1MF/25V	
C112	1-162-970-11	s	CAPACITOR CERAMIC 0.01MF/25V B	
C113	1-135-960-91	s	CAP, CHIP CERAMIC 10MF B(3225)	
C114	1-125-777-11	s	CAPACITOR CERAMIC 0.1MF/10V	
C115	1-125-777-11	s	CAPACITOR CERAMIC 0.1MF/10V	
C120	1-127-820-11	s	CAPACITOR, SQUARE CHIP 4.7MF	
C121	1-125-777-11	s	CAPACITOR CERAMIC 0.1MF/10V	
C122	1-125-777-11	s	CAPACITOR CERAMIC 0.1MF/10V	
C123	1-127-820-11	s	CAPACITOR, SQUARE CHIP 4.7MF	
C124	1-127-820-11	s	CAPACITOR, SQUARE CHIP 4.7MF	
C125	1-125-777-11	s	CAPACITOR CERAMIC 0.1MF/10V	
C126	1-125-777-11	s	CAPACITOR CERAMIC 0.1MF/10V	
C127	1-125-777-11	s	CAPACITOR CERAMIC 0.1MF/10V	
C128	1-125-777-11	s	CAPACITOR CERAMIC 0.1MF/10V	
C129	1-125-777-11	s	CAPACITOR CERAMIC 0.1MF/10V	
C130	1-125-777-11	s	CAPACITOR CERAMIC 0.1MF/10V	
C131	1-125-777-11	s	CAPACITOR CERAMIC 0.1MF/10V	
C132	1-125-777-11	s	CAPACITOR CERAMIC 0.1MF/10V	
C133	1-125-777-11	s	CAPACITOR CERAMIC 0.1MF/10V	
C134	1-125-777-11	s	CAPACITOR CERAMIC 0.1MF/10V	
C135	1-125-777-11	s	CAPACITOR CERAMIC 0.1MF/10V	
C136	1-125-777-11	s	CAPACITOR CERAMIC 0.1MF/10V	
C137	1-125-777-11	s	CAPACITOR CERAMIC 0.1MF/10V	
C138	1-125-777-11	s	CAPACITOR CERAMIC 0.1MF/10V	
CN101	1-778-795-21	s	PIN, CONNECTOR 9P	
CN102	1-573-934-21	s	CONNECTOR, FFC/FPC (ZIF) 25P	
D101	8-719-037-96	s	LED CL-190G-CD	
D102	8-719-037-96	s	LED CL-190G-CD	
D105	8-719-071-34	s	DIODE RB521S-30-TE61	
D108	8-719-071-34	s	DIODE RB521S-30-TE61	
D109	6-500-051-01	s	DIODE TLGE1005B(T03)	
D110	6-500-704-01	s	DIODE TLYE1005B(T03)	
D111	6-500-051-01	s	DIODE TLGE1005B(T03)	
D112	6-500-704-01	s	DIODE TLYE1005B(T03)	
E101	1-535-877-22	s	CHIP,CHECKER (TEST POINT)	
E102	1-535-877-22	s	CHIP,CHECKER (TEST POINT)	
FB101	1-400-462-21	s	FERRITE, EMI (SMD)	(1005)
FB102	1-400-462-21	s	FERRITE, EMI (SMD)	(1005)
FB103	1-400-462-21	s	FERRITE, EMI (SMD)	(1005)
FB104	1-400-462-21	s	FERRITE, EMI (SMD)	(1005)
FB105	1-400-462-21	s	FERRITE, EMI (SMD)	(1005)
FB106	1-400-461-21	s	FERRITE, EMI (SMD)	(1005)
FB107	1-400-461-21	s	FERRITE, EMI (SMD)	(1005)
FB108	1-400-462-21	s	FERRITE, EMI (SMD)	(1005)
FB109	1-400-462-21	s	FERRITE, EMI (SMD)	(1005)
FB110	1-400-462-21	s	FERRITE, EMI (SMD)	(1005)
FB111	1-400-462-21	s	FERRITE, EMI (SMD)	(1005)

(FP-138 BOARD)

Ref. No. or Q'ty	Part No.	SP	Description
FB112	1-400-462-21	s	FERRITE, EMI (SMD) (1005)
FB113	1-400-462-21	s	FERRITE, EMI (SMD) (1005)
FB114	1-400-462-21	s	FERRITE, EMI (SMD) (1005)
FB115	1-400-462-21	s	FERRITE, EMI (SMD) (1005)
FB116	1-469-324-21	s	FERRITE, EMI (SMD) 4.7UH
FB117	1-469-324-21	s	FERRITE, EMI (SMD) 4.7UH
FB118	1-400-461-21	s	FERRITE, EMI (SMD) (1005)
FB119	1-400-461-21	s	FERRITE, EMI (SMD) (1005)
FB120	1-400-461-21	s	FERRITE, EMI (SMD) (1005)
FB121	1-400-461-21	s	FERRITE, EMI (SMD) (1005)
FB122	1-400-461-21	s	FERRITE, EMI (SMD) (1005)
IC101	8-759-687-37	s	IC OPA2340EA/2K5-S
IC102	8-759-670-89	s	IC BU2090FS-E2
IC103	8-759-460-71	s	IC BA030FP-E2
IC104	8-759-549-14	s	IC SN74LV244APWR
Q101	8-729-927-99	s	TRANSISTOR 2SC4617R
Q102	8-729-927-99	s	TRANSISTOR 2SC4617R
Q103	8-729-927-99	s	TRANSISTOR 2SC4617R
Q104	8-729-927-99	s	TRANSISTOR 2SC4617R
R101	1-218-961-11	s	RESISTOR, CHIP 4.7K 1/16W
R103	1-218-957-11	s	RESISTOR,CHIP 2.2K 1/16W(1608)
R104	1-218-965-11	s	RESISTOR, CHIP 10K 1/16W
R105	1-218-961-11	s	RESISTOR, CHIP 4.7K 1/16W
R106	1-218-961-11	s	RESISTOR, CHIP 4.7K 1/16W
R109	1-218-977-11	s	RESISTOR,CHIP 100K 1/16W(1005)
R110	1-216-817-11	s	RESISTOR,CHIP 470 1/10W 1608
R111	1-216-817-11	s	RESISTOR,CHIP 470 1/10W 1608
R112	1-218-937-11	s	RESISTOR, CHIP 47
R113	1-218-937-11	s	RESISTOR, CHIP 47
R114	1-218-973-11	s	RESISTOR,CHIP 47K 1/16W (1005)
R115	1-218-973-11	s	RESISTOR,CHIP 47K 1/16W (1005)
R117	1-218-990-11	s	RESISTOR,CHIP 0 1/16W (1005)
R118	1-218-965-11	s	RESISTOR, CHIP 10K 1/16W
R119	1-218-965-11	s	RESISTOR, CHIP 10K 1/16W
R120	1-218-947-11	s	RESISTOR, CHIP 330 1/16W
R121	1-218-947-11	s	RESISTOR, CHIP 330 1/16W
R122	1-208-707-11	s	RESISTOR,CHIP 10K 1/16W (1005)
R123	1-208-707-11	s	RESISTOR,CHIP 10K 1/16W (1005)
R124	1-208-721-11	s	RESISTOR CHIP 39K 1/16W (1005)
R125	1-208-709-11	s	RESISTOR CHIP 12K 1/16W (1005)
R126	1-208-703-11	s	RESISTOR,CHIP 6.8K 1/16W(1005)
R127	1-208-697-11	s	RESISTOR CHIP 3.9K 1/16W(1005)
R128	1-218-958-11	s	RESISTOR,CHIP 2.7K 1/16W(1005)
R129	1-208-689-11	s	RESISTOR CHIP 1.8K 1/16W(1005)
R130	1-208-687-11	s	RESISTOR CHIP 1.5K 1/16W (1005
R134	1-218-959-11	s	RESISTOR, CHIP 3.3K
R135	1-218-959-11	s	RESISTOR, CHIP 3.3K
R136	1-218-959-11	s	RESISTOR, CHIP 3.3K
R137	1-218-959-11	s	RESISTOR, CHIP 3.3K
R142	1-218-973-11	s	RESISTOR,CHIP 47K 1/16W (1005)
R143	1-218-973-11	s	RESISTOR,CHIP 47K 1/16W (1005)
R144	1-218-973-11	s	RESISTOR,CHIP 47K 1/16W (1005)
R145	1-218-973-11	s	RESISTOR,CHIP 47K 1/16W (1005)
R146	1-218-990-11	s	RESISTOR,CHIP 0 1/16W (1005)
R147	1-218-990-11	s	RESISTOR,CHIP 0 1/16W (1005)
R149	1-218-973-11	s	RESISTOR,CHIP 47K 1/16W (1005)
R150	1-216-815-11	s	RESISTOR,CHIP 330 1/10W 1608
R151	1-216-815-11	s	RESISTOR,CHIP 330 1/10W 1608

(FP-138 BOARD)

Ref. No. or Q'ty	Part No.	SP	Description
R152	1-216-815-11	s	RESISTOR,CHIP 330 1/10W 1608
R153	1-216-815-11	s	RESISTOR,CHIP 330 1/10W 1608
R154	1-216-815-11	s	RESISTOR,CHIP 330 1/10W 1608
R155	1-216-815-11	s	RESISTOR,CHIP 330 1/10W 1608
R156	1-216-815-11	s	RESISTOR,CHIP 330 1/10W 1608
R157	1-216-815-11	s	RESISTOR,CHIP 330 1/10W 1608
R159	1-218-973-11	s	RESISTOR,CHIP 47K 1/16W (1005)
R161	1-218-990-11	s	RESISTOR,CHIP 0 1/16W (1005)
R162	1-218-973-11	s	RESISTOR,CHIP 47K 1/16W (1005)
RB101	1-234-378-11	s	RES, NETWORK 10KX4 (1005)
RB102	1-234-378-11	s	RES, NETWORK 10KX4 (1005)
RB103	1-234-378-11	s	RES, NETWORK 10KX4 (1005)
RB104	1-234-380-11	s	RESISTOE,NETWORK 47KX4 (1005)
RB105	1-234-380-11	s	RESISTOE,NETWORK 47KX4 (1005)
S101	1-786-608-21	s	SWITCH, TACTILE
S102	1-786-608-21	s	SWITCH, TACTILE
S103	1-786-608-21	s	SWITCH, TACTILE
S104	1-786-608-21	s	SWITCH, TACTILE
S105	1-786-608-21	s	SWITCH, TACTILE
S106	1-786-608-21	s	SWITCH, TACTILE
S107	1-786-608-21	s	SWITCH, TACTILE
VDR105	1-803-974-11	s	VARISTOR, CHIP
VDR106	1-803-974-11	s	VARISTOR, CHIP
VDR107	1-803-974-11	s	VARISTOR, CHIP
VDR109	1-801-922-11	s	VARISTOR, CHIP
VDR110	1-801-922-11	s	VARISTOR, CHIP
VDR111	1-803-974-11	s	VARISTOR, CHIP
VDR112	1-803-974-11	s	VARISTOR, CHIP
VDR113	1-803-974-11	s	VARISTOR, CHIP
VDR114	1-803-974-11	s	VARISTOR, CHIP
VDR115	1-803-974-11	s	VARISTOR, CHIP
VDR116	1-803-974-11	s	VARISTOR, CHIP
VDR117	1-801-922-11	s	VARISTOR, CHIP
VDR118	1-801-922-11	s	VARISTOR, CHIP
VDR119	1-803-974-11	s	VARISTOR, CHIP
VDR120	1-801-922-11	s	VARISTOR, CHIP
VDR121	1-803-974-11	s	VARISTOR, CHIP
VDR122	1-801-922-11	s	VARISTOR, CHIP
VDR123	1-801-922-11	s	VARISTOR, CHIP
VDR124	1-801-922-11	s	VARISTOR, CHIP

MEC-21 BOARD

Ref. No. or Q'ty	Part No.	SP	Description
BT201	1-550-414-31	s	HOLDER, BATTERY
C101	1-164-874-11	s	CAPACITOR,CHIP CERAMIC 100PF
C102	1-164-874-11	s	CAPACITOR,CHIP CERAMIC 100PF
C103	1-164-937-11	s	CAPACITOR,CHIP CERAMIC 1000PF
C104	1-164-937-11	s	CAPACITOR,CHIP CERAMIC 1000PF
C105	1-164-937-11	s	CAPACITOR,CHIP CERAMIC 1000PF
C106	1-164-937-11	s	CAPACITOR,CHIP CERAMIC 1000PF
C107	1-164-937-11	s	CAPACITOR,CHIP CERAMIC 1000PF
C108	1-164-937-11	s	CAPACITOR,CHIP CERAMIC 1000PF
C109	1-164-937-11	s	CAPACITOR,CHIP CERAMIC 1000PF
C110	1-164-937-11	s	CAPACITOR,CHIP CERAMIC 1000PF
C111	1-164-937-11	s	CAPACITOR,CHIP CERAMIC 1000PF
C112	1-164-937-11	s	CAPACITOR,CHIP CERAMIC 1000PF
C114	1-164-937-11	s	CAPACITOR,CHIP CERAMIC 1000PF
C115	1-164-937-11	s	CAPACITOR,CHIP CERAMIC 1000PF
C117	1-164-937-11	s	CAPACITOR,CHIP CERAMIC 1000PF
C118	1-164-937-11	s	CAPACITOR,CHIP CERAMIC 1000PF
C119	1-164-937-11	s	CAPACITOR,CHIP CERAMIC 1000PF
C120	1-135-960-91	s	CAP, CHIP CERAMIC 10MF B(3225)
C121	1-125-777-11	s	CAPACITOR CERAMIC 0.1MF/10V
C122	1-164-874-11	s	CAPACITOR,CHIP CERAMIC 100PF
C123	1-164-874-11	s	CAPACITOR,CHIP CERAMIC 100PF
C124	1-164-874-11	s	CAPACITOR,CHIP CERAMIC 100PF
C125	1-164-874-11	s	CAPACITOR,CHIP CERAMIC 100PF
C126	1-164-874-11	s	CAPACITOR,CHIP CERAMIC 100PF
C127	1-164-874-11	s	CAPACITOR,CHIP CERAMIC 100PF
C128	1-164-874-11	s	CAPACITOR,CHIP CERAMIC 100PF
C129	1-125-777-11	s	CAPACITOR CERAMIC 0.1MF/10V
C130	1-164-882-11	s	CAPACITOR,CERAMIC 220PF/16V CH
C131	1-164-874-11	s	CAPACITOR,CHIP CERAMIC 100PF
C132	1-125-777-11	s	CAPACITOR CERAMIC 0.1MF/10V
C201	1-107-420-11	s	CAPACITOR,ELECT 47MF/35V(105C)
C202	1-128-416-11	s	CAPACITOR ELECT 100MF/16V(105C
C203	1-125-777-11	s	CAPACITOR CERAMIC 0.1MF/10V
C204	1-164-874-11	s	CAPACITOR,CHIP CERAMIC 100PF
C205	1-164-874-11	s	CAPACITOR,CHIP CERAMIC 100PF
C206	1-115-339-11	s	CAPACITOR,CERAMIC 0.1MF/50V
C207	1-125-777-11	s	CAPACITOR CERAMIC 0.1MF/10V
C208	1-125-777-11	s	CAPACITOR CERAMIC 0.1MF/10V
C209	1-125-777-11	s	CAPACITOR CERAMIC 0.1MF/10V
C210	1-125-777-11	s	CAPACITOR CERAMIC 0.1MF/10V
C211	1-127-820-11	s	CAPACITOR, SQUARE CHIP 4.7MF
C212	1-127-820-11	s	CAPACITOR, SQUARE CHIP 4.7MF
C213	1-125-777-11	s	CAPACITOR CERAMIC 0.1MF/10V
C214	1-125-777-11	s	CAPACITOR CERAMIC 0.1MF/10V
C215	1-164-937-11	s	CAPACITOR,CHIP CERAMIC 1000PF
C216	1-125-777-11	s	CAPACITOR CERAMIC 0.1MF/10V
C217	1-164-937-11	s	CAPACITOR,CHIP CERAMIC 1000PF
C218	1-164-874-11	s	CAPACITOR,CHIP CERAMIC 100PF
C219	1-164-874-11	s	CAPACITOR,CHIP CERAMIC 100PF
C220	1-125-777-11	s	CAPACITOR CERAMIC 0.1MF/10V
C221	1-164-937-11	s	CAPACITOR,CHIP CERAMIC 1000PF
C222	1-125-777-11	s	CAPACITOR CERAMIC 0.1MF/10V
C223	1-125-777-11	s	CAPACITOR CERAMIC 0.1MF/10V
C224	1-125-777-11	s	CAPACITOR CERAMIC 0.1MF/10V
C225	1-164-937-11	s	CAPACITOR,CHIP CERAMIC 1000PF
C226	1-100-352-91	s	CAP, CHIP CERAMIC 1MF B (1608)
C227	1-100-352-91	s	CAP, CHIP CERAMIC 1MF B (1608)

(MEC-21 BOARD)

Ref. No. or Q'ty	Part No.	SP	Description
C229	1-127-820-11	s	CAPACITOR, SQUARE CHIP 4.7MF
C230	1-127-820-11	s	CAPACITOR, SQUARE CHIP 4.7MF
C232	1-125-777-11	s	CAPACITOR CERAMIC 0.1MF/10V
C233	1-125-777-11	s	CAPACITOR CERAMIC 0.1MF/10V
C234	1-125-777-11	s	CAPACITOR CERAMIC 0.1MF/10V
C235	1-164-937-11	s	CAPACITOR,CHIP CERAMIC 1000PF
C236	1-125-777-11	s	CAPACITOR CERAMIC 0.1MF/10V
C237	1-126-396-11	s	CAPACITOR,ELECT 47MF/16V(CHIP)
C238	1-164-937-11	s	CAPACITOR,CHIP CERAMIC 1000PF
C239	1-164-937-11	s	CAPACITOR,CHIP CERAMIC 1000PF
C241	1-164-937-11	s	CAPACITOR,CHIP CERAMIC 1000PF
C242	1-164-937-11	s	CAPACITOR,CHIP CERAMIC 1000PF
C301	1-127-820-11	s	CAPACITOR, SQUARE CHIP 4.7MF
C302	1-125-777-11	s	CAPACITOR CERAMIC 0.1MF/10V
C303	1-127-820-11	s	CAPACITOR, SQUARE CHIP 4.7MF
C304	1-125-777-11	s	CAPACITOR CERAMIC 0.1MF/10V
C305	1-164-874-11	s	CAPACITOR,CHIP CERAMIC 100PF
C306	1-164-874-11	s	CAPACITOR,CHIP CERAMIC 100PF
C307	1-125-777-11	s	CAPACITOR CERAMIC 0.1MF/10V
C308	1-125-777-11	s	CAPACITOR CERAMIC 0.1MF/10V
C309	1-127-573-11	s	CAPACITOR,CERAMIC 1MFB(2012)
C310	1-127-573-11	s	CAPACITOR,CERAMIC 1MFB(2012)
C311	1-125-777-11	s	CAPACITOR CERAMIC 0.1MF/10V
C313	1-125-777-11	s	CAPACITOR CERAMIC 0.1MF/10V
C314	1-125-777-11	s	CAPACITOR CERAMIC 0.1MF/10V
C315	1-125-777-11	s	CAPACITOR CERAMIC 0.1MF/10V
C316	1-125-777-11	s	CAPACITOR CERAMIC 0.1MF/10V
C317	1-125-777-11	s	CAPACITOR CERAMIC 0.1MF/10V
C318	1-125-777-11	s	CAPACITOR CERAMIC 0.1MF/10V
C401	1-125-777-11	s	CAPACITOR CERAMIC 0.1MF/10V
C402	1-125-777-11	s	CAPACITOR CERAMIC 0.1MF/10V
C403	1-127-820-11	s	CAPACITOR, SQUARE CHIP 4.7MF
C404	1-127-820-11	s	CAPACITOR, SQUARE CHIP 4.7MF
C405	1-125-777-11	s	CAPACITOR CERAMIC 0.1MF/10V
C406	1-125-777-11	s	CAPACITOR CERAMIC 0.1MF/10V
C407	1-127-820-11	s	CAPACITOR, SQUARE CHIP 4.7MF
C408	1-127-820-11	s	CAPACITOR, SQUARE CHIP 4.7MF
C409	1-125-777-11	s	CAPACITOR CERAMIC 0.1MF/10V
C410	1-127-820-11	s	CAPACITOR, SQUARE CHIP 4.7MF
C411	1-125-777-11	s	CAPACITOR CERAMIC 0.1MF/10V
C412	1-107-420-11	s	CAPACITOR,ELECT 47MF/35V(105C)
C413	1-115-339-11	s	CAPACITOR,CERAMIC 0.1MF/50V
C414	1-164-937-11	s	CAPACITOR,CHIP CERAMIC 1000PF
C415	1-164-882-11	s	CAPACITOR,CERAMIC 220PF/16V CH
C416	1-125-898-91	s	C-CAP, 0.22-50 Z F
C417	1-125-898-91	s	C-CAP, 0.22-50 Z F
C418	1-127-715-11	s	CAPACITOR,CERAMIC 0.22MF B1608
C419	1-125-898-91	s	C-CAP, 0.22-50 Z F
C420	1-125-898-91	s	C-CAP, 0.22-50 Z F
C421	1-127-715-11	s	CAPACITOR,CERAMIC 0.22MF B1608
C422	1-107-420-11	s	CAPACITOR,ELECT 47MF/35V(105C)
C423	1-125-777-11	s	CAPACITOR CERAMIC 0.1MF/10V
C424	1-107-420-11	s	CAPACITOR,ELECT 47MF/35V(105C)
C425	1-125-777-11	s	CAPACITOR CERAMIC 0.1MF/10V
C426	1-115-339-11	s	CAPACITOR,CERAMIC 0.1MF/50V
C427	1-115-339-11	s	CAPACITOR,CERAMIC 0.1MF/50V
C434	1-125-777-11	s	CAPACITOR CERAMIC 0.1MF/10V
C435	1-127-820-11	s	CAPACITOR, SQUARE CHIP 4.7MF
C436	1-125-777-11	s	CAPACITOR CERAMIC 0.1MF/10V

(MEC-21 BOARD)

Ref. No. or Q'ty	Part No.	SP	Description
C437	1-107-420-11	s	CAPACITOR,ELECT 47MF/35V(105C)
C438	1-115-339-11	s	CAPACITOR,CERAMIC 0.1MF/50V
C439	1-164-937-11	s	CAPACITOR,CHIP CERAMIC 1000PF
C440	1-164-882-11	s	CAPACITOR,CERAMIC 220PF/16V CH
CN101	1-569-775-11	o	PIN, CONNECTOR
CN102	1-691-551-11	o	PIN, CONNECTOR (SMD) 8P
CN103	1-691-551-11	o	PIN, CONNECTOR (SMD) 8P
CN104	1-764-007-11	o	PIN, CONNECTOR (SMD) 12P
CN105	1-764-007-11	o	PIN, CONNECTOR (SMD) 12P
CN106	1-580-056-21	s	PIN,CONNECTOR 3P
CN107	1-691-346-11	s	CONNECTOR, FFC/FPC 8P
CN201	1-774-863-11	s	PIN, CONNECTOR (PC BOARD) 8P
CN202	1-580-056-21	s	PIN,CONNECTOR 3P
CN203	1-815-031-11	s	CONNECTOR, FFC/FPC (ZIF) 24P
CN301	1-778-795-21	s	PIN, CONNECTOR 9P
CN401	1-750-005-11	o	PIN,CONNECTOR 4P
CN402	1-750-005-11	o	PIN,CONNECTOR 4P
D101	8-719-073-01	s	DIODE MA111-(K8).S0
D201	8-719-037-96	s	LED CL-190G-CD
D202	8-719-037-96	s	LED CL-190G-CD
D203	8-719-988-82	s	DIODE RB715F
D204	8-719-071-34	s	DIODE RB521S-30-TE61
D301	8-719-071-34	s	DIODE RB521S-30-TE61
D302	8-719-071-34	s	DIODE RB521S-30-TE61
D303	8-719-071-34	s	DIODE RB521S-30-TE61
D304	8-719-071-34	s	DIODE RB521S-30-TE61
D401	8-719-073-92	s	DIODE RB060L-40TE25
D402	8-719-073-92	s	DIODE RB060L-40TE25
D413	8-719-073-92	s	DIODE RB060L-40TE25
D414	8-719-073-92	s	DIODE RB060L-40TE25
E101	1-535-877-22	s	CHIP,CHECKER (TEST POINT)
FB101	1-469-324-21	s	FERRITE, EMI (SMD) 4.7UH
FB102	1-400-462-21	s	FERRITE, EMI (SMD) (1005)
FB103	1-400-462-21	s	FERRITE, EMI (SMD) (1005)
FB104	1-400-461-21	s	FERRITE, EMI (SMD) (1005)
FB105	1-400-461-21	s	FERRITE, EMI (SMD) (1005)
FB106	1-400-461-21	s	FERRITE, EMI (SMD) (1005)
FB107	1-400-461-21	s	FERRITE, EMI (SMD) (1005)
FB108	1-400-461-21	s	FERRITE, EMI (SMD) (1005)
FB109	1-400-461-21	s	FERRITE, EMI (SMD) (1005)
FB110	1-400-461-21	s	FERRITE, EMI (SMD) (1005)
FB111	1-400-461-21	s	FERRITE, EMI (SMD) (1005)
FB112	1-400-461-21	s	FERRITE, EMI (SMD) (1005)
FB113	1-400-461-21	s	FERRITE, EMI (SMD) (1005)
FB114	1-469-324-21	s	FERRITE, EMI (SMD) 4.7UH
FB115	1-400-461-21	s	FERRITE, EMI (SMD) (1005)
FB116	1-469-324-21	s	FERRITE, EMI (SMD) 4.7UH
FB117	1-400-461-21	s	FERRITE, EMI (SMD) (1005)
FB118	1-400-461-21	s	FERRITE, EMI (SMD) (1005)
FB119	1-400-461-21	s	FERRITE, EMI (SMD) (1005)
FB120	1-400-461-21	s	FERRITE, EMI (SMD) (1005)
FB121	1-400-461-21	s	FERRITE, EMI (SMD) (1005)
FB122	1-400-461-21	s	FERRITE, EMI (SMD) (1005)
FB123	1-400-461-21	s	FERRITE, EMI (SMD) (1005)
FB124	1-400-461-21	s	FERRITE, EMI (SMD) (1005)
FB125	1-400-461-21	s	FERRITE, EMI (SMD) (1005)
FB126	1-400-461-21	s	FERRITE, EMI (SMD) (1005)

(MEC-21 BOARD)

Ref. No. or Q'ty	Part No.	SP	Description
FB127	1-400-461-21	s	FERRITE, EMI (SMD) (1005)
FB128	1-469-324-21	s	FERRITE, EMI (SMD) 4.7UH
FB129	1-400-461-21	s	FERRITE, EMI (SMD) (1005)
FB130	1-400-461-21	s	FERRITE, EMI (SMD) (1005)
FB131	1-400-461-21	s	FERRITE, EMI (SMD) (1005)
FB132	1-469-324-21	s	FERRITE, EMI (SMD) 4.7UH
FB201	1-469-324-21	s	FERRITE, EMI (SMD) 4.7UH
FB202	1-469-324-21	s	FERRITE, EMI (SMD) 4.7UH
FB203	1-400-461-21	s	FERRITE, EMI (SMD) (1005)
FB204	1-400-461-21	s	FERRITE, EMI (SMD) (1005)
FB205	1-469-324-21	s	FERRITE, EMI (SMD) 4.7UH
FB206	1-400-462-21	s	FERRITE, EMI (SMD) (1005)
FB207	1-400-462-21	s	FERRITE, EMI (SMD) (1005)
FB208	1-400-462-21	s	FERRITE, EMI (SMD) (1005)
FB209	1-400-462-21	s	FERRITE, EMI (SMD) (1005)
FB210	1-400-462-21	s	FERRITE, EMI (SMD) (1005)
FB211	1-400-462-21	s	FERRITE, EMI (SMD) (1005)
FB212	1-400-462-21	s	FERRITE, EMI (SMD) (1005)
FB213	1-400-462-21	s	FERRITE, EMI (SMD) (1005)
FB214	1-400-462-21	s	FERRITE, EMI (SMD) (1005)
FB215	1-400-462-21	s	FERRITE, EMI (SMD) (1005)
FB216	1-400-462-21	s	FERRITE, EMI (SMD) (1005)
FB217	1-400-462-21	s	FERRITE, EMI (SMD) (1005)
FB218	1-400-462-21	s	FERRITE, EMI (SMD) (1005)
FB301	1-400-462-21	s	FERRITE, EMI (SMD) (1005)
FB302	1-400-462-21	s	FERRITE, EMI (SMD) (1005)
FB303	1-400-462-21	s	FERRITE, EMI (SMD) (1005)
FB304	1-400-462-21	s	FERRITE, EMI (SMD) (1005)
FB305	1-400-462-21	s	FERRITE, EMI (SMD) (1005)
FB306	1-469-324-21	s	FERRITE, EMI (SMD) 4.7UH
FB307	1-469-324-21	s	FERRITE, EMI (SMD) 4.7UH
FB401	1-469-324-21	s	FERRITE, EMI (SMD) 4.7UH
FB402	1-469-379-11	s	FERRITE, EMI (SMD)
FB403	1-469-324-21	s	FERRITE, EMI (SMD) 4.7UH
FB404	1-469-324-21	s	FERRITE, EMI (SMD) 4.7UH
FB405	1-469-379-11	s	FERRITE, EMI (SMD)
FB406	1-469-379-11	s	FERRITE, EMI (SMD)
FB407	1-469-379-11	s	FERRITE, EMI (SMD)
FB409	1-469-379-11	s	FERRITE, EMI (SMD)
FB410	1-469-379-11	s	FERRITE, EMI (SMD)
FB411	1-469-379-11	s	FERRITE, EMI (SMD)
FB412	1-469-379-11	s	FERRITE, EMI (SMD)
FB413	1-469-379-11	s	FERRITE, EMI (SMD)
FB414	1-469-379-11	s	FERRITE, EMI (SMD)
FB415	1-469-379-11	s	FERRITE, EMI (SMD)
FB416	1-469-379-11	s	FERRITE, EMI (SMD)
IC101	6-803-598-01	s	IC 37905F8CFP-LPR5000M0V1.00
IC102	8-759-549-14	s	IC SN74LV244APWR
IC201	8-759-648-04	s	IC RTC4574JE-TP
IC202	8-759-523-84	s	IC TC74VHC14FT (EL)
IC203	8-759-548-96	s	IC SN74LV02APWR
IC204	8-759-523-84	s	IC TC74VHC14FT (EL)
IC205	8-759-196-96	s	IC TC7SH08FU (TE85R)
IC206	8-759-578-68	s	IC SN74LVCC4245APWR
IC207	8-759-578-68	s	IC SN74LVCC4245APWR
IC301	8-759-196-96	s	IC TC7SH08FU (TE85R)
IC302	8-759-196-96	s	IC TC7SH08FU (TE85R)
IC401	6-701-548-01	s	IC A3952SLB-TR

(MEC-21 BOARD)

Ref. No. or Q'ty	Part No.	SP	Description
IC402	6-705-040-01	s	IC A3959SLBTR
IC403	6-705-040-01	s	IC A3959SLBTR
IC404	6-701-548-01	s	IC A3952SLB-TR
IC3003	8-759-100-93	s	IC UPC393G2
PH201	8-719-052-69	s	PHOTO INTERRUPTER RPI-352
Q101	8-729-929-08	s	TRANSISTOR DTC123JE
Q102	8-729-929-08	s	TRANSISTOR DTC123JE
Q103	8-729-928-54	s	TRANSISTOR DTA123JE
Q201	8-729-929-08	s	TRANSISTOR DTC123JE
Q202	8-729-929-08	s	TRANSISTOR DTC123JE
Q203	8-729-047-32	s	TRANSISTOR SI4425DY-T1
Q204	8-729-047-32	s	TRANSISTOR SI4425DY-T1
R1	1-218-477-11	s	RESISTOR CHIP 220 1/4W (3225)
R2	1-218-477-11	s	RESISTOR CHIP 220 1/4W (3225)
R3	1-218-477-11	s	RESISTOR CHIP 220 1/4W (3225)
R4	1-218-477-11	s	RESISTOR CHIP 220 1/4W (3225)
R5	1-218-477-11	s	RESISTOR CHIP 220 1/4W (3225)
R6	1-218-477-11	s	RESISTOR CHIP 220 1/4W (3225)
R7	1-218-477-11	s	RESISTOR CHIP 220 1/4W (3225)
R8	1-218-477-11	s	RESISTOR CHIP 220 1/4W (3225)
R9	1-218-973-11	s	RESISTOR,CHIP 47K 1/16W (1005)
R10	1-218-477-11	s	RESISTOR CHIP 220 1/4W (3225)
R11	1-218-477-11	s	RESISTOR CHIP 220 1/4W (3225)
R12	1-218-973-11	s	RESISTOR,CHIP 47K 1/16W (1005)
R13	1-218-969-11	s	RESISTOR,CHIP 22K 1/16W (1608)
R14	1-218-961-11	s	RESISTOR, CHIP 4.7K 1/16W
R15	1-218-965-11	s	RESISTOR, CHIP 10K 1/16W
R16	1-218-941-81	s	RESISTOR,CHIP 100,1/16W (1005)
R17	1-218-941-81	s	RESISTOR,CHIP 100,1/16W (1005)
R18	1-218-969-11	s	RESISTOR,CHIP 22K 1/16W (1608)
R19	1-218-961-11	s	RESISTOR, CHIP 4.7K 1/16W
R20	1-218-965-11	s	RESISTOR, CHIP 10K 1/16W
R21	1-218-953-11	s	RESISTOR, CHIP 1K 1/16W
R22	1-218-953-11	s	RESISTOR, CHIP 1K 1/16W
R23	1-218-971-11	s	RESISTOR,CHIP 33K 1/16W (1005)
R24	1-218-969-11	s	RESISTOR,CHIP 22K 1/16W (1608)
R25	1-218-969-11	s	RESISTOR,CHIP 22K 1/16W (1608)
R26	1-218-969-11	s	RESISTOR,CHIP 22K 1/16W (1608)
R27	1-218-969-11	s	RESISTOR,CHIP 22K 1/16W (1608)
R28	1-218-969-11	s	RESISTOR,CHIP 22K 1/16W (1608)
R29	1-218-969-11	s	RESISTOR,CHIP 22K 1/16W (1608)
R30	1-218-961-11	s	RESISTOR, CHIP 4.7K 1/16W
R31	1-218-969-11	s	RESISTOR,CHIP 22K 1/16W (1608)
R32	1-218-961-11	s	RESISTOR, CHIP 4.7K 1/16W
R33	1-218-969-11	s	RESISTOR,CHIP 22K 1/16W (1608)
R34	1-218-953-11	s	RESISTOR, CHIP 1K 1/16W
R35	1-218-953-11	s	RESISTOR, CHIP 1K 1/16W
R36	1-218-953-11	s	RESISTOR, CHIP 1K 1/16W
R37	1-218-953-11	s	RESISTOR, CHIP 1K 1/16W
R38	1-218-953-11	s	RESISTOR, CHIP 1K 1/16W
R39	1-218-953-11	s	RESISTOR, CHIP 1K 1/16W
R40	1-218-953-11	s	RESISTOR, CHIP 1K 1/16W
R41	1-218-953-11	s	RESISTOR, CHIP 1K 1/16W
R42	1-218-953-11	s	RESISTOR, CHIP 1K 1/16W
R43	1-218-953-11	s	RESISTOR, CHIP 1K 1/16W
R44	1-218-953-11	s	RESISTOR, CHIP 1K 1/16W
R45	1-218-953-11	s	RESISTOR, CHIP 1K 1/16W

(MEC-21 BOARD)

Ref. No. or Q'ty	Part No.	SP	Description
R46	1-218-947-11	s	RESISTOR, CHIP 330 1/16W
R47	1-218-947-11	s	RESISTOR, CHIP 330 1/16W
R48	1-218-969-11	s	RESISTOR,CHIP 22K 1/16W (1608)
R49	1-218-947-11	s	RESISTOR, CHIP 330 1/16W
R50	1-218-947-11	s	RESISTOR, CHIP 330 1/16W
R51	1-218-953-11	s	RESISTOR, CHIP 1K 1/16W
R52	1-218-971-11	s	RESISTOR,CHIP 33K 1/16W (1005)
R54	1-218-965-11	s	RESISTOR, CHIP 10K 1/16W
R55	1-218-947-11	s	RESISTOR, CHIP 330 1/16W
R56	1-218-947-11	s	RESISTOR, CHIP 330 1/16W
R57	1-218-947-11	s	RESISTOR, CHIP 330 1/16W
R58	1-218-947-11	s	RESISTOR, CHIP 330 1/16W
R59	1-218-947-11	s	RESISTOR, CHIP 330 1/16W
R60	1-218-947-11	s	RESISTOR, CHIP 330 1/16W
R62	1-218-947-11	s	RESISTOR, CHIP 330 1/16W
R63	1-218-947-11	s	RESISTOR, CHIP 330 1/16W
R64	1-218-947-11	s	RESISTOR, CHIP 330 1/16W
R65	1-218-947-11	s	RESISTOR, CHIP 330 1/16W
R66	1-218-947-11	s	RESISTOR, CHIP 330 1/16W
R67	1-218-941-81	s	RESISTOR,CHIP 100,1/16W (1005)
R68	1-218-941-81	s	RESISTOR,CHIP 100,1/16W (1005)
R69	1-218-941-81	s	RESISTOR,CHIP 100,1/16W (1005)
R70	1-218-941-81	s	RESISTOR,CHIP 100,1/16W (1005)
R71	1-218-947-11	s	RESISTOR, CHIP 330 1/16W
R72	1-218-947-11	s	RESISTOR, CHIP 330 1/16W
R73	1-218-953-11	s	RESISTOR, CHIP 1K 1/16W
R74	1-218-947-11	s	RESISTOR, CHIP 330 1/16W
R75	1-218-953-11	s	RESISTOR, CHIP 1K 1/16W
R76	1-218-947-11	s	RESISTOR, CHIP 330 1/16W
R77	1-218-941-81	s	RESISTOR,CHIP 100,1/16W (1005)
R78	1-218-973-11	s	RESISTOR,CHIP 47K 1/16W (1005)
R79	1-218-973-11	s	RESISTOR,CHIP 47K 1/16W (1005)
R80	1-218-973-11	s	RESISTOR,CHIP 47K 1/16W (1005)
R81	1-218-947-11	s	RESISTOR, CHIP 330 1/16W
R82	1-218-973-11	s	RESISTOR,CHIP 47K 1/16W (1005)
R83	1-218-941-81	s	RESISTOR,CHIP 100,1/16W (1005)
R84	1-218-973-11	s	RESISTOR,CHIP 47K 1/16W (1005)
R85	1-218-941-81	s	RESISTOR,CHIP 100,1/16W (1005)
R86	1-218-973-11	s	RESISTOR,CHIP 47K 1/16W (1005)
R87	1-218-941-81	s	RESISTOR,CHIP 100,1/16W (1005)
R88	1-218-947-11	s	RESISTOR, CHIP 330 1/16W
R89	1-218-973-11	s	RESISTOR,CHIP 47K 1/16W (1005)
R90	1-218-973-11	s	RESISTOR,CHIP 47K 1/16W (1005)
R91	1-218-989-11	s	RESISTOR,CHIP 1M 1/16W (1005)
R92	1-218-963-11	s	RESISTOR,CHIP 6.8K 1/16W
R93	1-218-951-11	s	RESISTOR, CHIP 680 1/16
R94	1-218-973-11	s	RESISTOR,CHIP 47K 1/16W (1005)
R95	1-218-953-11	s	RESISTOR, CHIP 1K 1/16W
R96	1-218-947-11	s	RESISTOR, CHIP 330 1/16W
R97	1-218-947-11	s	RESISTOR, CHIP 330 1/16W
R98	1-218-973-11	s	RESISTOR,CHIP 47K 1/16W (1005)
R99	1-218-947-11	s	RESISTOR, CHIP 330 1/16W
R100	1-218-947-11	s	RESISTOR, CHIP 330 1/16W
R101	1-218-947-11	s	RESISTOR, CHIP 330 1/16W
R102	1-218-973-11	s	RESISTOR,CHIP 47K 1/16W (1005)
R201	1-218-951-11	s	RESISTOR, CHIP 680 1/16
R202	1-216-821-11	s	RESISTOR,CHIP 1.0K 1/10W(1608)
R203	1-216-821-11	s	RESISTOR,CHIP 1.0K 1/10W(1608)
R204	1-216-821-11	s	RESISTOR,CHIP 1.0K 1/10W(1608)

(MEC-21 BOARD)

Ref. No. or Q'ty	Part No.	SP	Description
R205	1-218-973-11	s	RESISTOR,CHIP 47K 1/16W (1005)
R206	1-218-973-11	s	RESISTOR,CHIP 47K 1/16W (1005)
R207	1-218-973-11	s	RESISTOR,CHIP 47K 1/16W (1005)
R208	1-218-965-11	s	RESISTOR, CHIP 10K 1/16W
R209	1-218-973-11	s	RESISTOR,CHIP 47K 1/16W (1005)
R210	1-218-965-11	s	RESISTOR, CHIP 10K 1/16W
R213	1-218-973-11	s	RESISTOR,CHIP 47K 1/16W (1005)
R214	1-218-973-11	s	RESISTOR,CHIP 47K 1/16W (1005)
R215	1-218-973-11	s	RESISTOR,CHIP 47K 1/16W (1005)
R216	1-218-973-11	s	RESISTOR,CHIP 47K 1/16W (1005)
R217	1-218-973-11	s	RESISTOR,CHIP 47K 1/16W (1005)
R218	1-218-973-11	s	RESISTOR,CHIP 47K 1/16W (1005)
R219	1-218-953-11	s	RESISTOR, CHIP 1K 1/16W
R220	1-218-961-11	s	RESISTOR, CHIP 4.7K 1/16W
R222	1-218-961-11	s	RESISTOR, CHIP 4.7K 1/16W
R224	1-218-965-11	s	RESISTOR, CHIP 10K 1/16W
R225	1-218-965-11	s	RESISTOR, CHIP 10K 1/16W
R226	1-218-965-11	s	RESISTOR, CHIP 10K 1/16W
R227	1-218-965-11	s	RESISTOR, CHIP 10K 1/16W
R228	1-218-973-11	s	RESISTOR,CHIP 47K 1/16W (1005)
R229	1-218-973-11	s	RESISTOR,CHIP 47K 1/16W (1005)
R230	1-218-973-11	s	RESISTOR,CHIP 47K 1/16W (1005)
R231	1-218-973-11	s	RESISTOR,CHIP 47K 1/16W (1005)
R232	1-218-973-11	s	RESISTOR,CHIP 47K 1/16W (1005)
R235	1-208-707-11	s	RESISTOR,CHIP 10K 1/16W (1005)
R237	1-218-969-11	s	RESISTOR,CHIP 22K 1/16W (1608)
R238	1-218-969-11	s	RESISTOR,CHIP 22K 1/16W (1608)
R239	1-218-477-11	s	RESISTOR CHIP 220 1/4W (3225)
R241	1-218-477-11	s	RESISTOR CHIP 220 1/4W (3225)
R242	1-218-953-11	s	RESISTOR, CHIP 1K 1/16W
R243	1-218-953-11	s	RESISTOR, CHIP 1K 1/16W
R244	1-218-953-11	s	RESISTOR, CHIP 1K 1/16W
R246	1-218-969-11	s	RESISTOR,CHIP 22K 1/16W (1608)
R247	1-218-969-11	s	RESISTOR,CHIP 22K 1/16W (1608)
R248	1-218-953-11	s	RESISTOR, CHIP 1K 1/16W
R249	1-218-953-11	s	RESISTOR, CHIP 1K 1/16W
R251	1-218-947-11	s	RESISTOR, CHIP 330 1/16W
R253	1-218-947-11	s	RESISTOR, CHIP 330 1/16W
R254	1-218-947-11	s	RESISTOR, CHIP 330 1/16W
R301	1-218-973-11	s	RESISTOR,CHIP 47K 1/16W (1005)
R302	1-218-973-11	s	RESISTOR,CHIP 47K 1/16W (1005)
R304	1-218-965-11	s	RESISTOR, CHIP 10K 1/16W
R305	1-218-961-11	s	RESISTOR, CHIP 4.7K 1/16W
R306	1-218-965-11	s	RESISTOR, CHIP 10K 1/16W
R307	1-218-961-11	s	RESISTOR, CHIP 4.7K 1/16W
R308	1-218-941-81	s	RESISTOR,CHIP 100,1/16W (1005)
R309	1-218-941-81	s	RESISTOR,CHIP 100,1/16W (1005)
R310	1-218-941-81	s	RESISTOR,CHIP 100,1/16W (1005)
R311	1-218-947-11	s	RESISTOR, CHIP 330 1/16W
R312	1-218-961-11	s	RESISTOR, CHIP 4.7K 1/16W
R313	1-218-947-11	s	RESISTOR, CHIP 330 1/16W
R314	1-218-961-11	s	RESISTOR, CHIP 4.7K 1/16W
R315	1-218-973-11	s	RESISTOR,CHIP 47K 1/16W (1005)
R316	1-218-973-11	s	RESISTOR,CHIP 47K 1/16W (1005)
R317	1-218-973-11	s	RESISTOR,CHIP 47K 1/16W (1005)
R318	1-208-707-11	s	RESISTOR,CHIP 10K 1/16W (1005)
R319	1-208-707-11	s	RESISTOR,CHIP 10K 1/16W (1005)
R320	1-218-965-11	s	RESISTOR, CHIP 10K 1/16W
R321	1-218-965-11	s	RESISTOR, CHIP 10K 1/16W

(MEC-21 BOARD)

Ref. No. or Q'ty	Part No.	SP	Description
R322	1-218-973-11	s	RESISTOR,CHIP 47K 1/16W (1005)
R323	1-218-973-11	s	RESISTOR,CHIP 47K 1/16W (1005)
R324	1-218-965-11	s	RESISTOR, CHIP 10K 1/16W
R325	1-218-965-11	s	RESISTOR, CHIP 10K 1/16W
R401	1-218-990-11	s	RESISTOR,CHIP 0 1/16W (1005)
R402	1-218-990-11	s	RESISTOR,CHIP 0 1/16W (1005)
R403	1-218-973-11	s	RESISTOR,CHIP 47K 1/16W (1005)
R406	1-218-973-11	s	RESISTOR,CHIP 47K 1/16W (1005)
R407	1-218-973-11	s	RESISTOR,CHIP 47K 1/16W (1005)
R409	1-218-973-11	s	RESISTOR,CHIP 47K 1/16W (1005)
R411	1-218-973-11	s	RESISTOR,CHIP 47K 1/16W (1005)
R413	1-218-973-11	s	RESISTOR,CHIP 47K 1/16W (1005)
R415	1-218-973-11	s	RESISTOR,CHIP 47K 1/16W (1005)
R417	1-218-973-11	s	RESISTOR,CHIP 47K 1/16W (1005)
R418	1-218-973-11	s	RESISTOR,CHIP 47K 1/16W (1005)
R423	1-218-973-11	s	RESISTOR,CHIP 47K 1/16W (1005)
R425	1-218-973-11	s	RESISTOR,CHIP 47K 1/16W (1005)
R428	1-218-990-11	s	RESISTOR,CHIP 0 1/16W (1005)
R430	1-218-990-11	s	RESISTOR,CHIP 0 1/16W (1005)
R431	1-218-973-11	s	RESISTOR,CHIP 47K 1/16W (1005)
R433	1-208-703-11	s	RESISTOR,CHIP 6.8K 1/16W(1005)
R434	1-218-973-11	s	RESISTOR,CHIP 47K 1/16W (1005)
R436	1-218-990-11	s	RESISTOR,CHIP 0 1/16W (1005)
R437	1-218-971-11	s	RESISTOR,CHIP 33K 1/16W (1005)
R438	1-208-713-11	s	RESISTOR CHIP 18K 1/16W (1005)
R439	1-208-695-11	s	RESISTOR CHIP 3.3K 1/16W(1005)
R440	1-218-971-11	s	RESISTOR,CHIP 33K 1/16W (1005)
R441	1-208-713-11	s	RESISTOR CHIP 18K 1/16W (1005)
R442	1-218-963-11	s	RESISTOR,CHIP 6.8K 1/16W
R443	1-218-961-11	s	RESISTOR, CHIP 4.7K 1/16W
R445	1-218-965-11	s	RESISTOR, CHIP 10K 1/16W
R446	1-218-963-11	s	RESISTOR,CHIP 6.8K 1/16W
R447	1-218-961-11	s	RESISTOR, CHIP 4.7K 1/16W
R448	1-245-259-21	s	RESISTOR, METAL FILM CHIP 0.22
R449	1-218-969-11	s	RESISTOR,CHIP 22K 1/16W (1608)
R450	1-219-706-11	s	RESISTOR, CHIP 0.10/1W
R451	1-219-706-11	s	RESISTOR, CHIP 0.10/1W
R453	1-218-990-11	s	RESISTOR,CHIP 0 1/16W (1005)
R454	1-218-973-11	s	RESISTOR,CHIP 47K 1/16W (1005)
R455	1-218-973-11	s	RESISTOR,CHIP 47K 1/16W (1005)
R456	1-208-703-11	s	RESISTOR,CHIP 6.8K 1/16W(1005)
R457	1-218-990-11	s	RESISTOR,CHIP 0 1/16W (1005)
R458	1-208-695-11	s	RESISTOR CHIP 3.3K 1/16W(1005)
R460	1-218-965-11	s	RESISTOR, CHIP 10K 1/16W
R461	1-218-990-11	s	RESISTOR,CHIP 0 1/16W (1005)
R462	1-218-990-11	s	RESISTOR,CHIP 0 1/16W (1005)
R463	1-218-990-11	s	RESISTOR,CHIP 0 1/16W (1005)
R464	1-218-990-11	s	RESISTOR,CHIP 0 1/16W (1005)
R465	1-245-259-21	s	RESISTOR, METAL FILM CHIP 0.22
R466	1-218-969-11	s	RESISTOR,CHIP 22K 1/16W (1608)
SE201	1-477-178-11	s	HUMIDITY SENSOR
THP201	1-533-817-21	s	THERMISTOR
THP202	1-533-817-21	s	THERMISTOR
THP203	1-809-357-21	s	THERMISTOR
TP101	1-535-877-22	s	CHIP,CHECKER (TEST POINT)
TP102	1-535-877-22	s	CHIP,CHECKER (TEST POINT)
TP103	1-535-877-22	s	CHIP,CHECKER (TEST POINT)

(MEC-21 BOARD)

Ref. No. or Q'ty	Part No.	SP	Description
VDR201	1-803-974-11	s	VARISTOR, CHIP
VDR202	1-803-974-11	s	VARISTOR, CHIP
VDR203	1-803-974-11	s	VARISTOR, CHIP
VDR204	1-803-974-11	s	VARISTOR, CHIP
VDR205	1-803-974-11	s	VARISTOR, CHIP
VDR206	1-803-974-11	s	VARISTOR, CHIP
VDR207	1-803-974-11	s	VARISTOR, CHIP
VDR208	1-803-974-11	s	VARISTOR, CHIP
VDR209	1-803-974-11	s	VARISTOR, CHIP
VDR210	1-803-974-11	s	VARISTOR, CHIP
VDR211	1-803-974-11	s	VARISTOR, CHIP
VDR212	1-803-974-11	s	VARISTOR, CHIP
VDR213	1-803-974-11	s	VARISTOR, CHIP
VDR301	1-803-974-11	s	VARISTOR, CHIP
VDR302	1-803-974-11	s	VARISTOR, CHIP
VDR304	1-803-974-11	s	VARISTOR, CHIP
VDR305	1-803-974-11	s	VARISTOR, CHIP
VDR306	1-801-922-11	s	VARISTOR, CHIP
VDR307	1-801-922-11	s	VARISTOR, CHIP
X101	1-795-121-11	s	VIBRATOR, CERAMIC

SE-643 BOARD

Ref. No. or Q'ty	Part No.	SP	Description
1pc	A-8347-436-A	s	MOUNTED CIRCUIT BOARD, SE-643
C1	1-127-820-11	s	CAPACITOR, SQUARE CHIP 4.7MF
C2	1-164-943-11	s	CAPACITOR,CHIP CERAMIC 0.01MF
CN1	1-566-760-11	s	PIN,CONNECTOR (PC BOARD) 5P
PH1	1-476-935-11	s	SENSOR, ENCODER
R1	1-218-831-11	s	RESISTOR, CHIP 220 1/10W(1608)
R2	1-218-947-11	s	RESISTOR, CHIP 330 1/16W
R3	1-218-947-11	s	RESISTOR, CHIP 330 1/16W
VDR1	1-801-922-11	s	VARISTOR, CHIP
VDR2	1-803-974-11	s	VARISTOR, CHIP
VDR3	1-803-974-11	s	VARISTOR, CHIP

SE-644 BOARD

Ref. No. or Q'ty	Part No.	SP	Description
1pc	A-8347-437-A	s	MOUNTED CIRCUIT BOARD, SE-644
C1	1-125-777-11	s	CAPACITOR CERAMIC 0.1MF/10V
C2	1-164-874-11	s	CAPACITOR,CHIP CERAMIC 100PF
CN1	1-691-550-11	s	PIN,CONNECTOR (3P)(SMD)(1.5MM)
PH1	8-719-052-69	s	PHOTO INTERRUPTER RPI-352

SE-645 BOARD

Ref. No. or Q'ty	Part No.	SP	Description
1pc	A-8347-438-A	s	MOUNTED CIRCUIT BOARD, SE-645
C1	1-125-777-11	s	CAPACITOR CERAMIC 0.1MF/10V
C2	1-164-874-11	s	CAPACITOR,CHIP CERAMIC 100PF
CN1	1-565-875-11	o	PIN,CONNECTOR(PC BOARD)3P
PH1	8-719-052-69	s	PHOTO INTERRUPTER RPI-352

SE-646 BOARD

Ref. No. or Q'ty	Part No.	SP	Description
1pc	A-8347-439-A	s	MOUNTED CIRCUIT BOARD, SE-646
C1	1-125-777-11	s	CAPACITOR CERAMIC 0.1MF/10V
C2	1-164-874-11	s	CAPACITOR,CHIP CERAMIC 100PF
CN1	1-691-550-51	s	PIN, CONNECTOR (1.5MM)(SMD)3P
PH1	8-719-052-69	s	PHOTO INTERRUPTER RPI-352

SE-673 BOARD

Ref. No. or Q'ty	Part No.	SP	Description
1pc	A-8347-440-A	s	MOUNTED CIRCUIT BOARD, SE-673
C1	1-125-777-11	s	CAPACITOR CERAMIC 0.1MF/10V
C2	1-164-874-11	s	CAPACITOR,CHIP CERAMIC 100PF
CN1	1-691-550-11	s	PIN,CONNECTOR (3P)(SMD)(1.5MM)
PH1	8-719-052-69	s	PHOTO INTERRUPTER RPI-352

SE-674 BOARD

Ref. No. or Q'ty	Part No.	SP	Description
1pc	A-8347-441-A	s	MOUNTED CIRCUIT BOARD, SE-674
C1	1-125-777-11	s	CAPACITOR CERAMIC 0.1MF/10V
C2	1-164-874-11	s	CAPACITOR,CHIP CERAMIC 100PF
CN1	1-691-550-11	s	PIN,CONNECTOR (3P)(SMD)(1.5MM)
PH1	8-719-052-69	s	PHOTO INTERRUPTER RPI-352

SE-736 BOARD

Ref. No. or Q'ty	Part No.	SP	Description
1pc	A-8347-443-A	s	MOUNTED CIRCUIT BOARD, SE-736
C1	1-164-874-11	s	CAPACITOR,CHIP CERAMIC 100PF
C2	1-125-777-11	s	CAPACITOR CERAMIC 0.1MF/10V
C3	1-164-874-11	s	CAPACITOR,CHIP CERAMIC 100PF
CN1	1-770-160-21	o	PIN, CONNECTOR (SMT) 2P
CN2	1-580-056-21	s	PIN,CONNECTOR 3P
CN3	1-770-469-21	o	PIN, CONNECTOR (PC BOARD) 2P
PH1	8-719-052-69	s	PHOTO INTERRUPTER RPI-352

SE-737 BOARD

Ref. No. or Q'ty	Part No.	SP	Description
1pc	A-8347-444-A	s	MOUNTED CIRCUIT BOARD, SE-737
C1	1-125-777-11	s	CAPACITOR CERAMIC 0.1MF/10V
C2	1-164-874-11	s	CAPACITOR,CHIP CERAMIC 100PF
CN1	1-691-550-51	s	PIN, CONNECTOR (1.5MM)(SMD)3P
PH1	8-719-052-69	s	PHOTO INTERRUPTER RPI-352

SU-69 BOARD

Ref. No. or Q'ty	Part No.	SP	Description
C1	1-164-874-11	s	CAPACITOR,CHIP CERAMIC 100PF
CN1	1-770-469-21	o	PIN, CONNECTOR (PC BOARD) 2P

SU-74 BOARD

Ref. No. or Q'ty	Part No.	SP	Description
CN1	1-770-469-21	o	PIN, CONNECTOR (PC BOARD) 2P

SU-75 BOARD

Ref. No. or Q'ty	Part No.	SP	Description
C1	1-164-874-11	s	CAPACITOR,CHIP CERAMIC 100PF
CN1	1-770-469-21	o	PIN, CONNECTOR (PC BOARD) 2P

SW-1105 BOARD

Ref. No. or Q'ty	Part No.	SP	Description
1pc	A-8347-448-A	s	MOUNTED CIRCUIT BOARD, SW-1105
C1	1-115-339-11	s	CAPACITOR,CERAMIC 0.1MF/50V
CN1	1-564-706-11	o	PIN,CONNECTOR (4P)

6-4. Frame

```
-----
FRAME
-----
 Ref. No.
 or Q'ty  Part No.    SP Description

 1pc    ⚠ 1-468-854-11 s REGULATOR, SWITCHING
 2pcs     1-476-936-11 s SENSOR, PHOTO MICRO
 1pc    ⚠ 1-528-174-11 s BATTERY, LITHIUM (CR2032 TYPE)
 1pc      1-684-433-11 o PRINTED WIRING BOARD, IF-881 FLEXIBLE
 1pc      1-763-927-11 s FAN, DC (SQUARE 25)

 1pc      1-787-054-11 s MOTOR, DC GEARED
 1pc      1-804-542-11 s LCD MODULE
 1pc      1-860-258-11 o PRINTED WIRING BOARD, DIO-72 FLEXIBLE
 1pc      1-860-259-11 o PRINTED WIRING BOARD, DIO-73 FLEXIBLE

 HN001    1-962-585-21 o HARNESS, SUB (CN)
  (TO CN3/SWITCHING REGULATOR)
  (TO CN7/CN-2393 BOARD)

 HN002    1-962-586-11 o HARNESS, SUB (CPU)
  (TO CN4/SWITCHING REGULATOR)
  (TO CN1001/CPU-347 BOARD)

 HN003    1-962-587-22 o HARNESS, SUB (MEC)
  (TO CN5/SWITCHING REGULATOR)
  (TO CN201/MEC-21 BOARD)
  (TO CN1/SW-1105 BOARD)

 HN004    1-962-594-21 o HARNESS, SUB (VH)
  (TO CN1/SWITCHING REGULATOR)
  (TO CN5/CN-2393 BOARD)

 HN005    1-962-595-21 o HARNESS, SUB (VH-GND)
  (TO CN2/SWITCHING REGULATOR)
  (TO CN6/CN-2393 BOARD)

 HN006    1-962-592-11 o HARNESS, SUB (CAP MOTOR)
  (TO CN402/MEC-21 BOARD)
  (TO CN1/SU-69 BOARD)
  (TO CN1/SE-736 BOARD)

 HN007    1-962-588-11 o HARNESS, SUB (AEDS ENCODER)
  (TO CN101/MEC-21 BOARD)
  (TO CN1/SE-643 BOARD)

 HN008    1-962-598-12 o HARNESS, SUB (POMP 1 SENSOR)
  (TO CN202/MEC-21 BOARD)
  (TO CN2/SE-736 BOARD)

 HN009    1-962-593-11 o HARNESS, SUB(CONVEYANCE MOTOR)
  (TO CN401/MEC-21 BOARD)
  (TO CN1/SU-74 BOARD)
  (TO CN1/SU-75 BOARD)

 HN010    1-962-596-11 o HARNESS, SUB (CAP SWITCHING)
  (TO CN102/MEC-21 BOARD)
  (TO CN1/SE-673 BOARD)
  (TO CN1/SE-674 BOARD)
  (TO SET_OPEN2 SWITCH)

 HN011    1-962-597-12 o HARNESS, SUB (LIMIT SWITCH)
  (TO CN103/MEC-21 BOARD)
  (TO CN1/SE-645 BOARD)
  (TO CN1/SE-737 BOARD)
  (TO SET_OPEN1 SWITCH)

 HN012    1-962-757-12 o HARNESS, SUB (FP)
  (TO CN301/MEC-21 BOARD)
  (TO CN101/FP-138 BOARD)
```

6-5. Packing Materials & Supplied Accessories

```
---------------------------------------
PACKING MATERIALS & SUPPLIED ACCESSORIES
---------------------------------------
 Ref. No.
 or Q'ty  Part No.    SP Description

 1pc      A-8348-215-A s HEAD UNIT ASSY (RP)
 1pc      1-824-211-41 s CORD, CONNECTION
 1pc      3-809-956-02 s JOINT,ARM
 1pc      3-853-994-02 s PACK,CD-ROM
```

Section 7
Block Diagrams

7-1

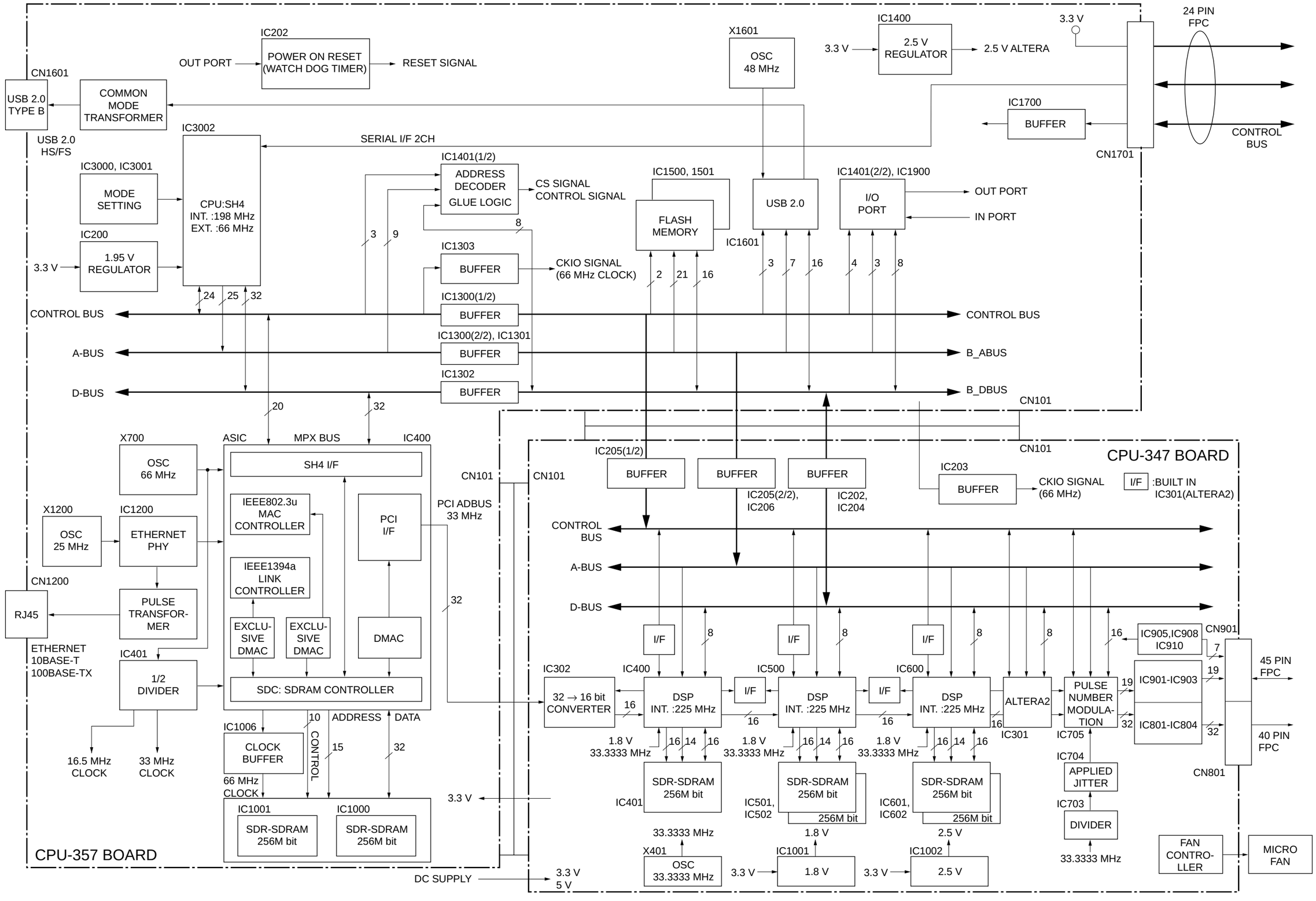
CN1601
USB 2.0 TYPE B
COMMON MODE TRANSFORMER
USB 2.0 HS/FS
IC202
POWER ON RESET (WATCH DOG TIMER)
OUT PORT
RESET SIGNAL
X1601
OSC 48 MHz
IC1400
2.5 V REGULATOR
3.3 V
2.5 V ALTERA
24 PIN FPC
IC1700
BUFFER
CONTROL BUS
CN1701
IC3002
SERIAL I/F 2CH
IC3000, IC3001
MODE SETTING
CPU:SH4 INT. :198 MHz EXT. :66 MHz
IC200
1.95 V REGULATOR
IC1401(1/2)
ADDRESS DECODER
GLUE LOGIC
CS SIGNAL CONTROL SIGNAL
IC1500, 1501
FLASH MEMORY
IC1601
USB 2.0
IC1401(2/2), IC1900
I/O PORT
OUT PORT
IN PORT
IC1303
BUFFER
CKIO SIGNAL (66 MHz CLOCK)
IC1300(1/2)
IC1300(2/2), IC1301
IC1302
CONTROL BUS
A-BUS
D-BUS
B_ABUS
B_DBUS
CN101
X700
OSC 66 MHz
ASIC
MPX BUS
IC400
SH4 I/F
IEEE802.3u MAC CONTROLLER
PCI I/F
IEEE1394a LINK CONTROLLER
EXCLU-SIVE DMAC
DMAC
SDC: SDRAM CONTROLLER
PCI ADBUS 33 MHz
X1200
OSC 25 MHz
IC1200
ETHERNET PHY
CN1200
RJ45
PULSE TRANSFOR-MER
ETHERNET 10BASE-T 100BASE-TX
IC401
1/2 DIVIDER
16.5 MHz CLOCK
33 MHz CLOCK
IC1006
CLOCK BUFFER
66 MHz CLOCK
ADDRESS
DATA
CONTROL
IC1001
SDR-SDRAM 256M bit
IC1000
SDR-SDRAM 256M bit
CPU-357 BOARD
3.3 V
DC SUPPLY
3.3 V
5 V
IC205(1/2)
IC205(2/2), IC206
IC202, IC204
IC203
CKIO SIGNAL (66 MHz)
I/F :BUILT IN IC301(ALTERA2)
CPU-347 BOARD
IC302
32 → 16 bit CONVERTER
IC400
DSP INT. :225 MHz
IC500
IC600
ALTERA2
IC301
PULSE NUMBER MODULA-TION
IC705
IC905,IC908 IC910
CN901
IC901-IC903
IC801-IC804
45 PIN FPC
40 PIN FPC
CN801
IC704
APPLIED JITTER
IC703
DIVIDER
33.3333 MHz
1.8 V
33.3333 MHz
SDR-SDRAM 256M bit
IC401
IC501, IC502
IC601, IC602
256M bit
2.5 V
X401
OSC 33.3333 MHz
IC1001
1.8 V
IC1002
2.5 V
FAN CONTRO-LLER
MICRO FAN

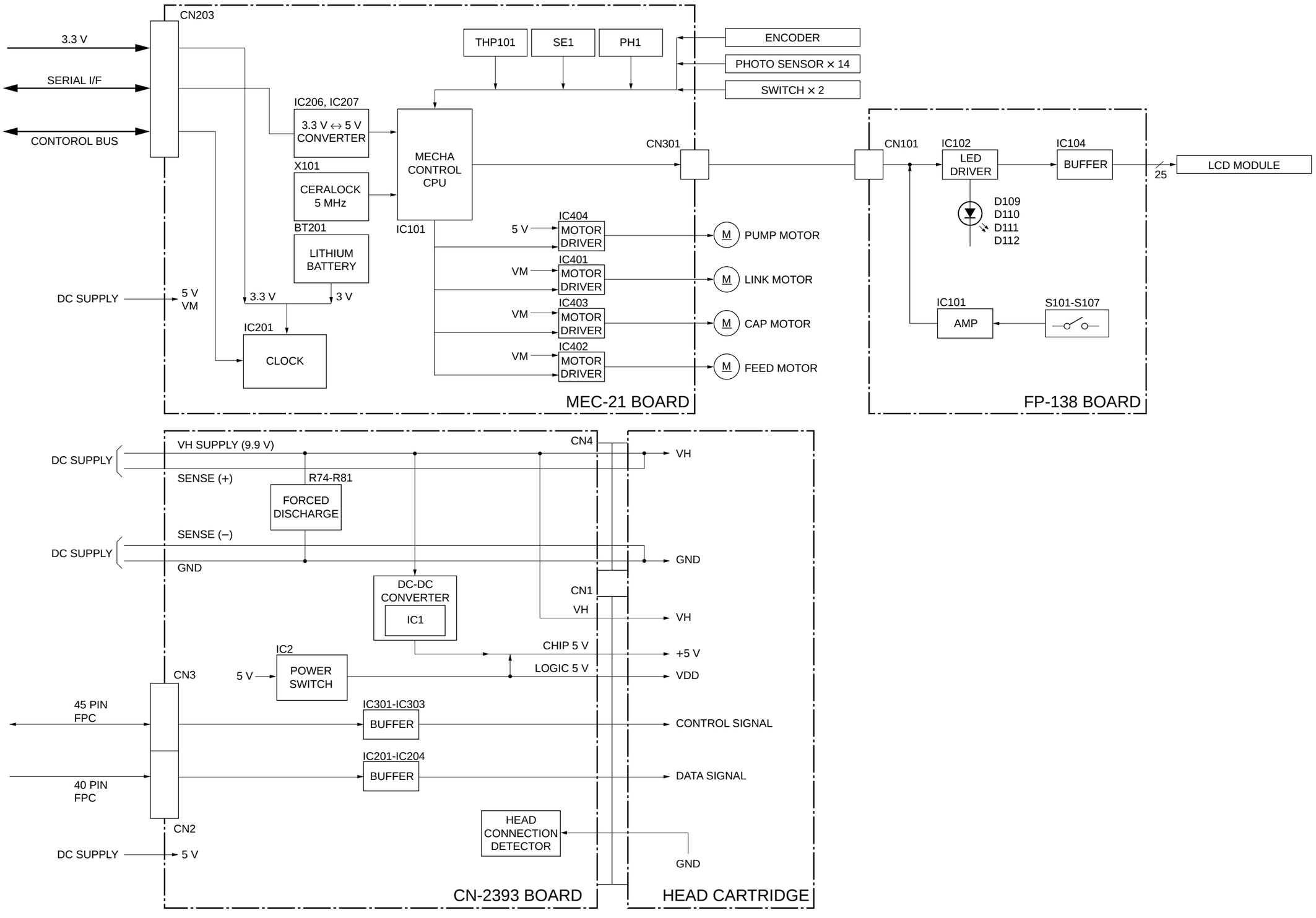
CN203
3.3 V
SERIAL I/F
CONTOROL BUS
DC SUPPLY
5 V
VM
3.3 V
3 V
IC206, IC207
3.3 V ↔ 5 V CONVERTER
X101
CERALOCK 5 MHz
BT201
LITHIUM BATTERY
IC201
CLOCK
THP101
SE1
PH1
MECHA CONTROL CPU
IC101
CN301
5 V
IC404
MOTOR DRIVER
VM
IC401
MOTOR DRIVER
VM
IC403
MOTOR DRIVER
VM
IC402
MOTOR DRIVER
M
PUMP MOTOR
LINK MOTOR
CAP MOTOR
FEED MOTOR
ENCODER
PHOTO SENSOR × 14
SWITCH × 2
MEC-21 BOARD
CN101
IC102
LED DRIVER
IC104
BUFFER
25
LCD MODULE
D109
D110
D111
D112
IC101
AMP
S101-S107
FP-138 BOARD
DC SUPPLY
VH SUPPLY (9.9 V)
SENSE (+)
R74-R81
FORCED DISCHARGE
SENSE (–)
DC SUPPLY
GND
DC-DC CONVERTER
IC1
CN4
VH
GND
CN1
VH
VH
CHIP 5 V
+5 V
LOGIC 5 V
VDD
IC2
POWER SWITCH
5 V
CN3
45 PIN FPC
40 PIN FPC
IC301-IC303
BUFFER
CONTROL SIGNAL
IC201-IC204
BUFFER
DATA SIGNAL
CN2
DC SUPPLY
5 V
HEAD CONNECTION DETECTOR
GND
CN-2393 BOARD
HEAD CARTRIDGE

 CN-2393 (1/3)

Section 8
Schematic Diagrams and Board Layouts

8-1. Schematic Diagrams

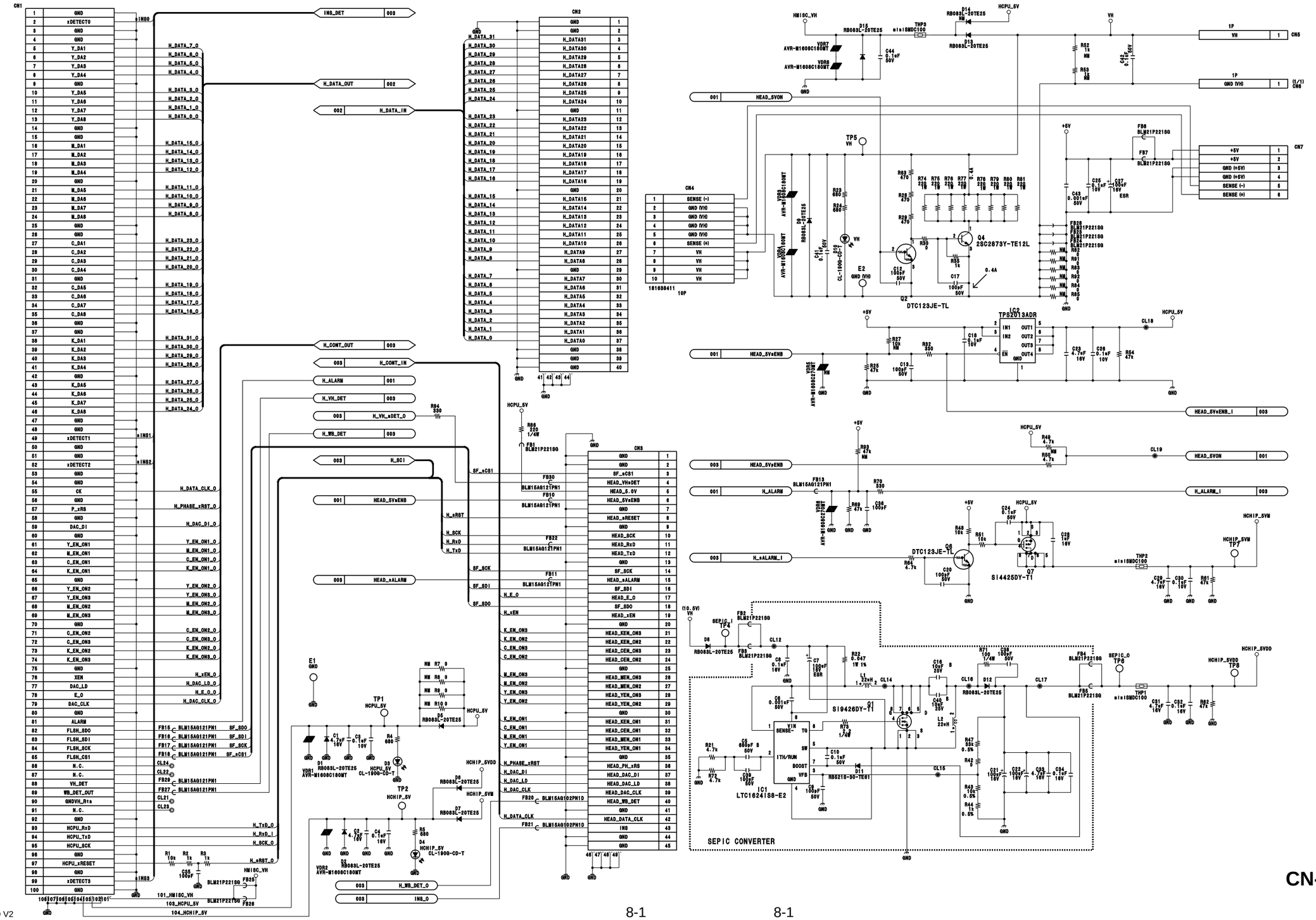

CN-2393 (1/3)

 CN-2393 (2/3)

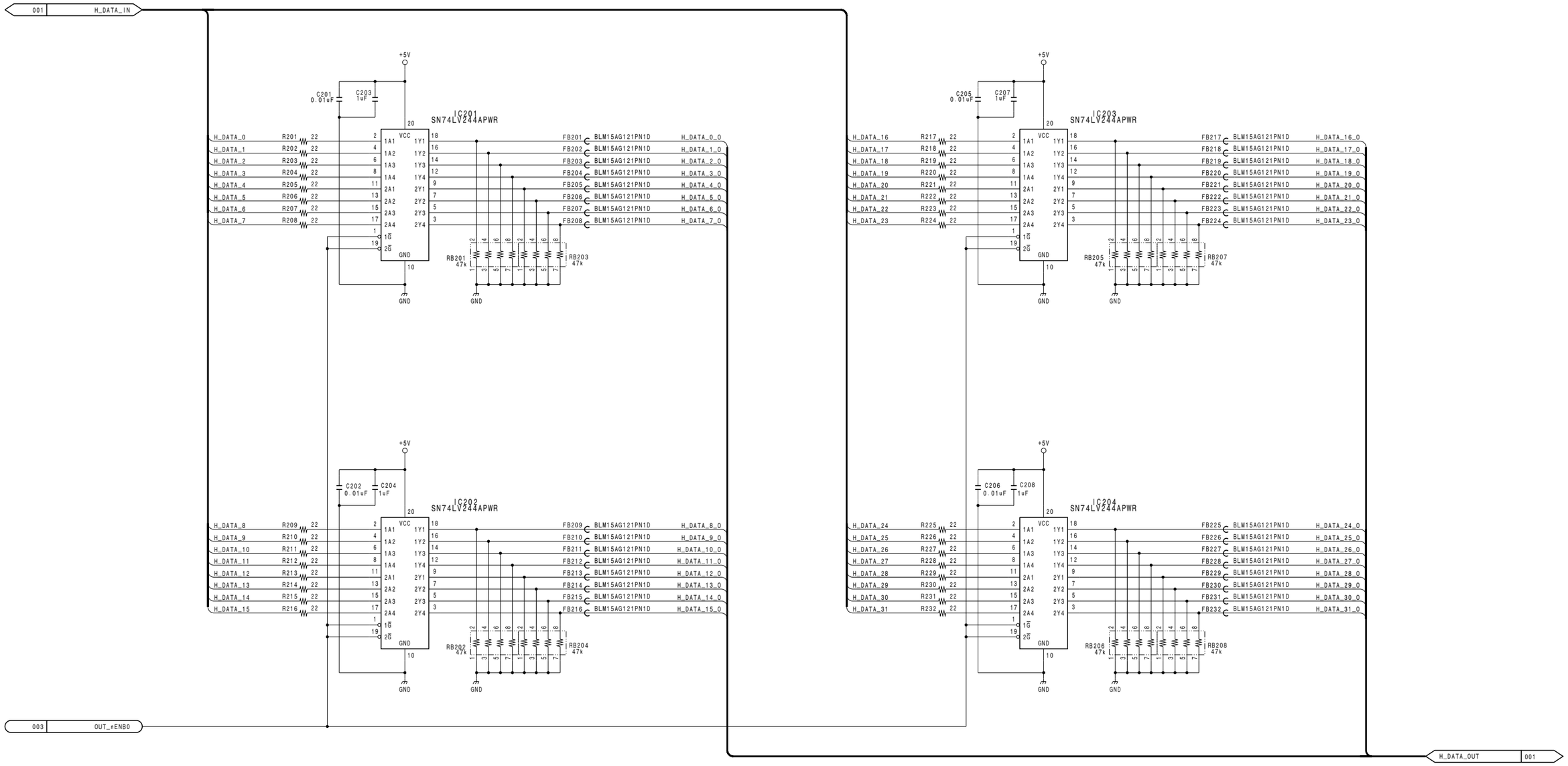

CN-2393 (2/3)

 8-2

 CN-2393 (3/3)

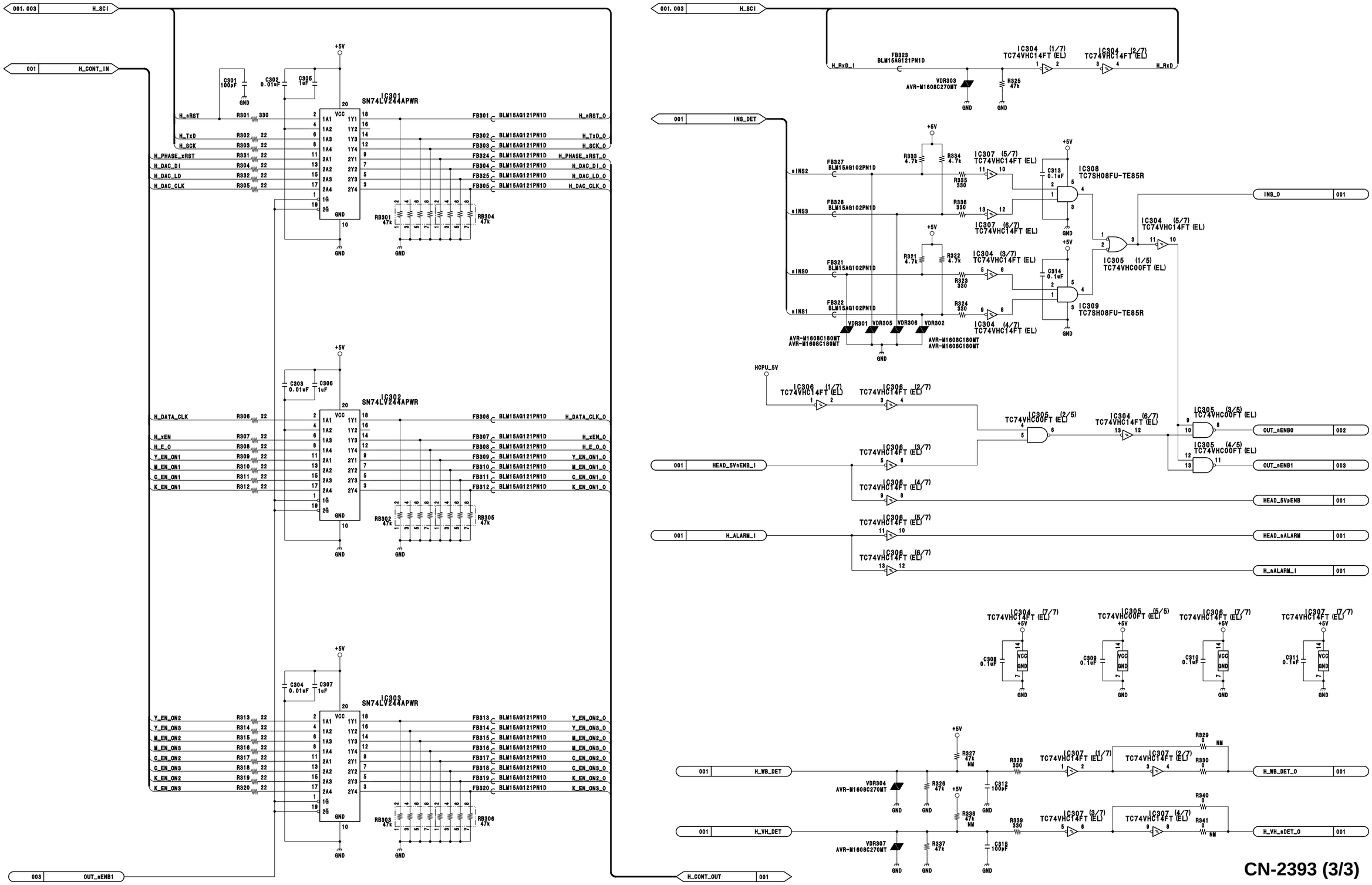
001, 003 H_SCI
001 H_CONT_IN
IC301 SN74LV244APWR
IC302 SN74LV244APWR
IC303 SN74LV244APWR
H_nRST
H_TxD
H_SCK
H_PHASE_xRST
H_DAC_DI
H_DAC_LD
H_DAC_CLK
H_DATA_CLK
H_xEN
H_E_O
Y_EN_ON1
M_EN_ON1
C_EN_ON1
K_EN_ON1
Y_EN_ON2
Y_EN_ON3
M_EN_ON2
M_EN_ON3
C_EN_ON2
C_EN_ON3
K_EN_ON2
K_EN_ON3
003 OUT_nENB1
H_RxD_I
H_RxD
IC304 (1/7) TC74VHC14FT (EL)
IC304 (2/7) TC74VHC14FT (EL)
001 INS_DET
IC307 (5/7) TC74VHC14FT (EL)
IC307 (6/7) TC74VHC14FT (EL)
IC304 (3/7) TC74VHC14FT (EL)
IC304 (4/7) TC74VHC14FT (EL)
IC308 TC7SH08FU-TE85R
IC309 TC7SH08FU-TE85R
IC305 (1/5) TC74VHC00FT (EL)
INS_0 001
HCPU_5V
IC306 (1/7) TC74VHC14FT (EL)
IC306 (2/7) TC74VHC14FT (EL)
IC305 (2/5) TC74VHC00FT (EL)
IC304 (6/7) TC74VHC14FT (EL)
IC305 (3/5) TC74VHC00FT (EL)
IC305 (4/5) TC74VHC00FT (EL)
OUT_nENB0 002
OUT_nENB1 003
001 HEAD_5VnENB_I
IC306 (3/7) TC74VHC14FT (EL)
IC306 (4/7) TC74VHC14FT (EL)
HEAD_5VnENB 001
001 H_ALARM_I
IC306 (5/7) TC74VHC14FT (EL)
IC306 (6/7) TC74VHC14FT (EL)
HEAD_nALARM 001
H_nALARM_I 001
IC304 (7/7) TC74VHC14FT (EL)
IC305 (5/5) TC74VHC00FT (EL)
IC306 (7/7) TC74VHC14FT (EL)
IC307 (7/7) TC74VHC14FT (EL)
001 H_WB_DET
H_WB_DET_O 001
IC307 (1/7) TC74VHC14FT (EL)
IC307 (2/7) TC74VHC14FT (EL)
001 H_VH_DET
H_VH_nDET_O 001
IC307 (3/7) TC74VHC14FT (EL)
IC307 (4/7) TC74VHC14FT (EL)
H_CONT_OUT 001
CN-2393 (3/3)

 CPU-347 (1/11)

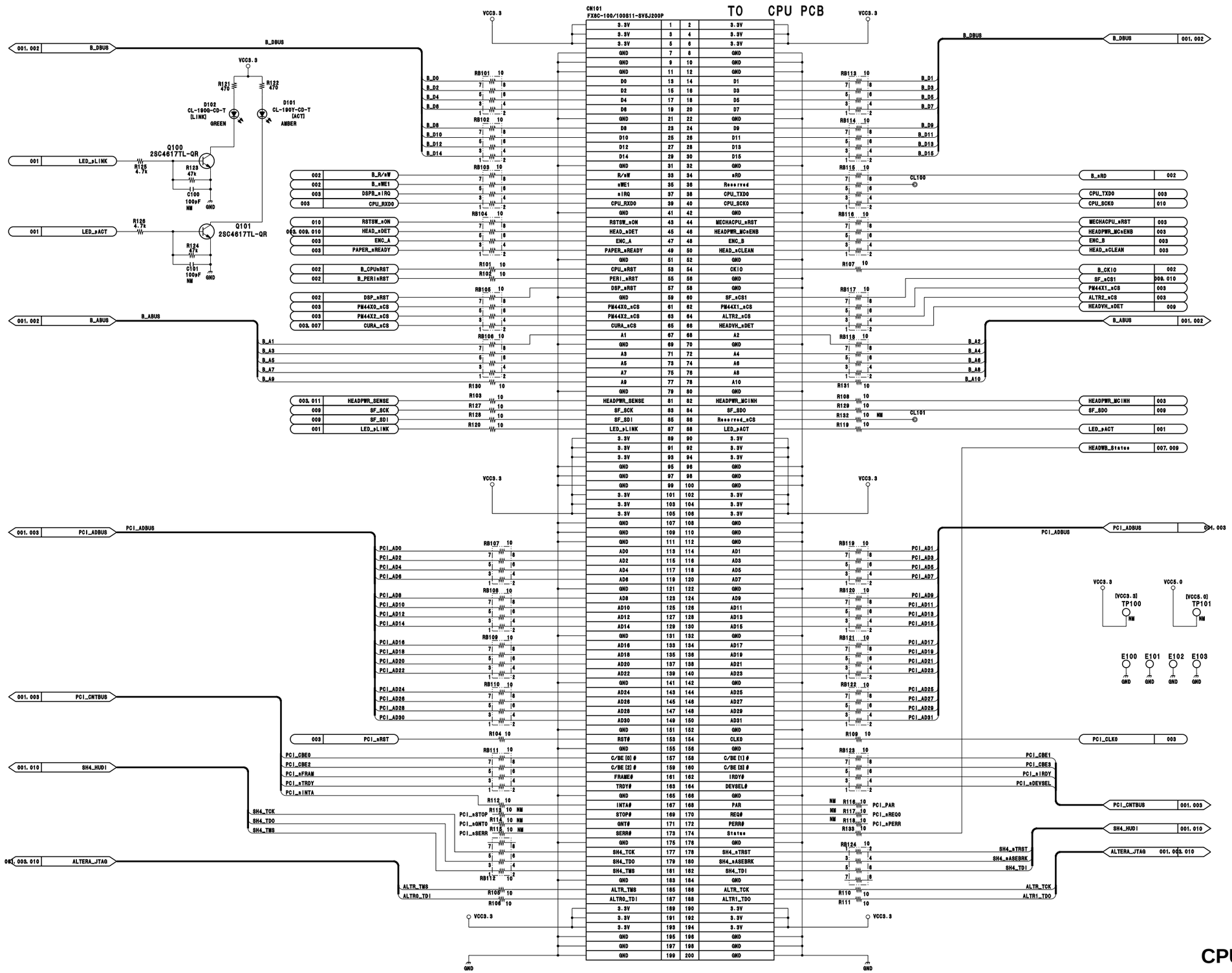

 8-4

 CPU-347 (2/11)

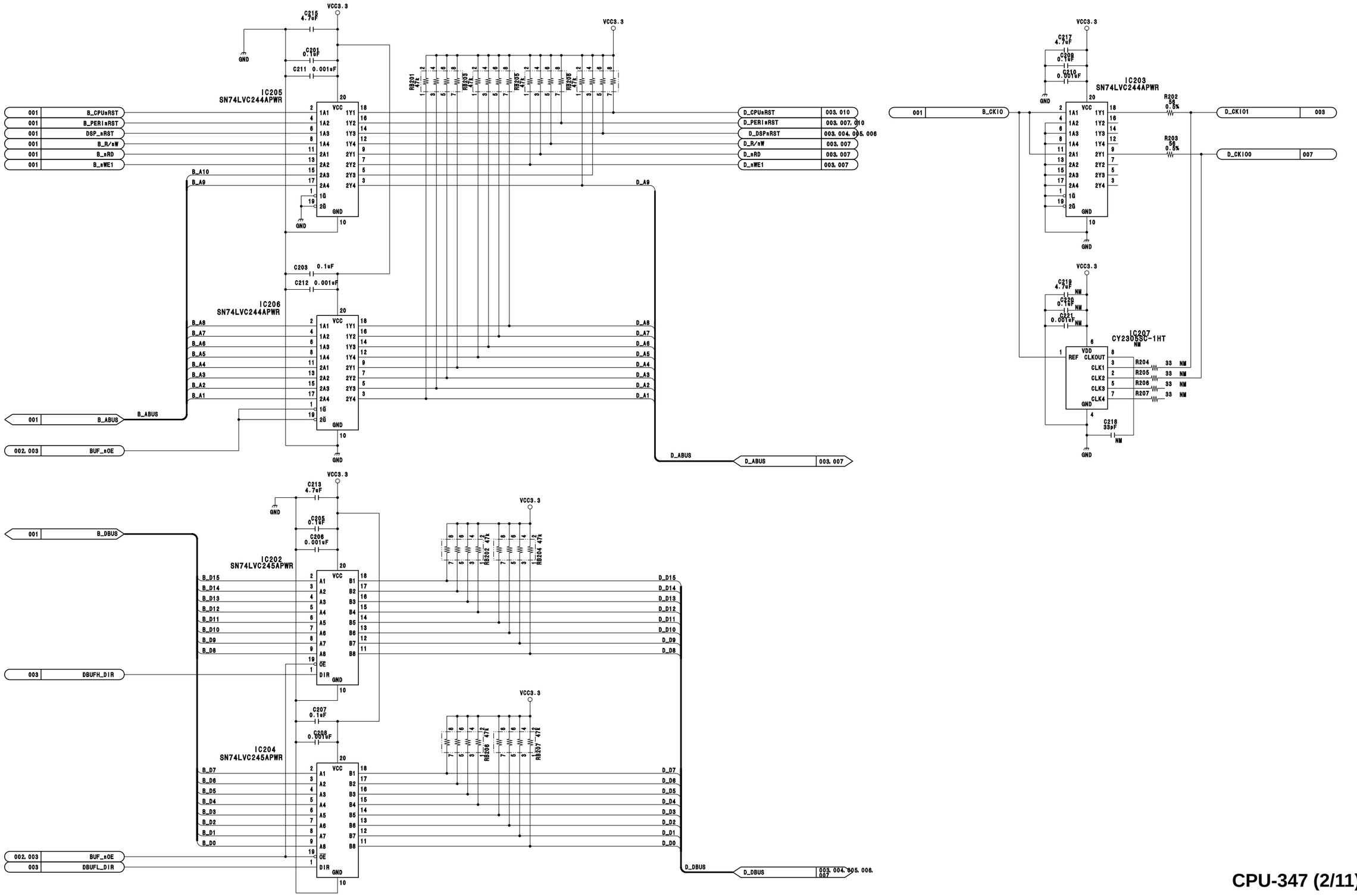
IC205
SN74LVC244APWR
IC206
SN74LVC244APWR
IC203
SN74LVC244APWR
IC202
SN74LVC245APWR
IC204
SN74LVC245APWR
IC207
CY23OSSC-1HT
B_CPUnRST
B_PERInRST
DSP_nRST
B_R/nW
B_nRD
B_nWE1
B_ABUS
BUF_nOE
B_DBUS
DBUFH_DIR
DBUFL_DIR
B_CKIO
D_CPUnRST
D_PERInRST
D_DSPnRST
D_R/nW
D_nRD
D_nWE1
D_ABUS
D_DBUS
D_CKIO1
D_CKIO0
VCC3.3
GND

 CPU-347 (3/11)

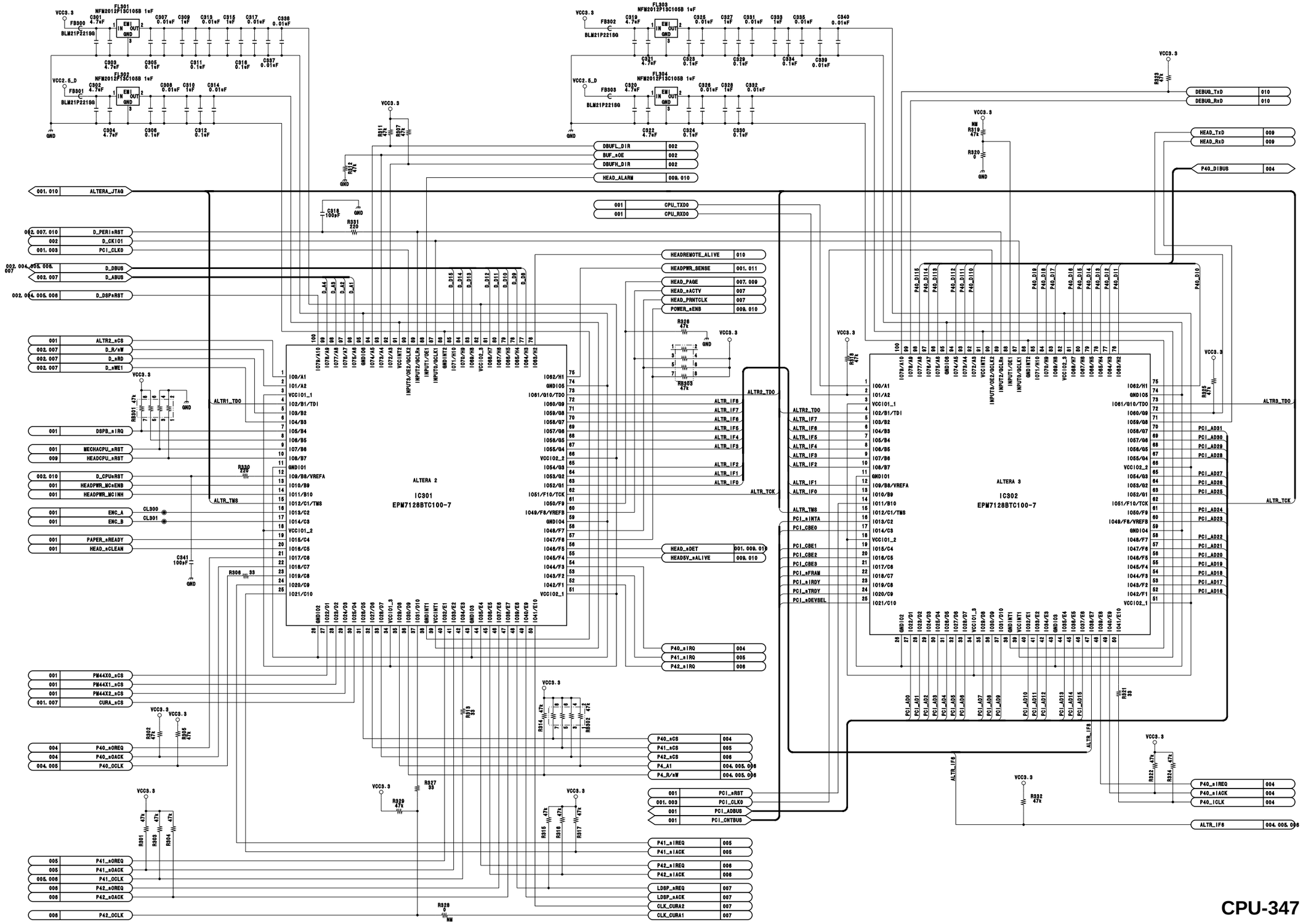

 8-6

CPU-347 (3/11)

 CPU-347 (4/11)

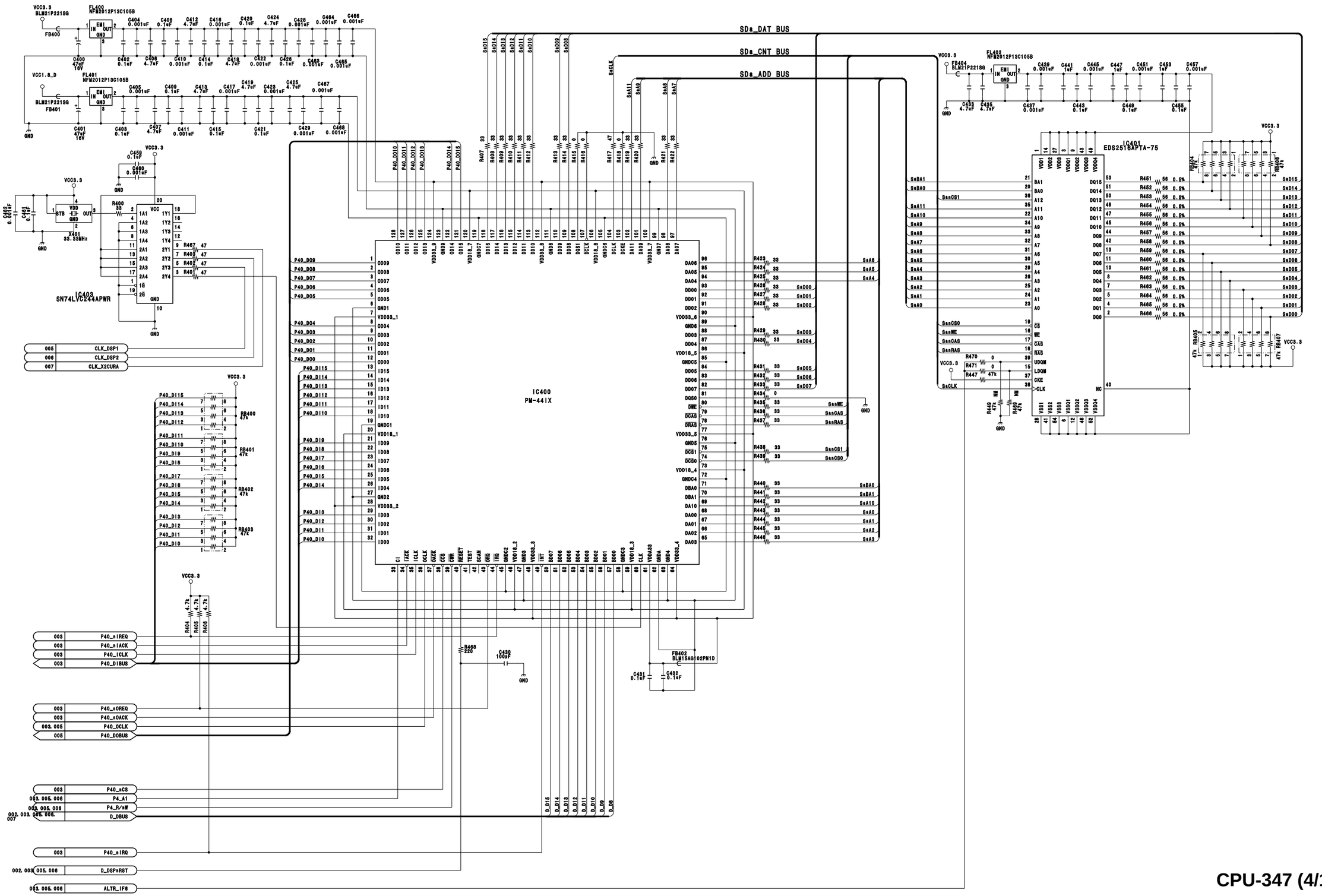
SDa_DAT BUS
SDa_CNT BUS
SDa_ADD BUS
IC400
PM-441X
IC401
EDS2518APTA-75
IC403
SN74LVC244APWR
X401
33.33MHz
FL400
NFM2012P13C105B
FL401
NFM2012P13C105B
FL402
NFM2012P13C105B
FB402
BLM15AG102PN1D
CLK_DSP1
CLK_DSP2
CLK_X2CURA
P40_nIREQ
P40_nIACK
P40_ICLK
P40_DIBUS
P40_nOREQ
P40_nOACK
P40_OCLK
P40_DOBUS
P40_nCS
P4_A1
P4_R/nW
D_DBUS
P40_nIRQ
D_DSPnRST
ALTR_IF6
VCC3.3
GND

 CPU-347 (5/11)

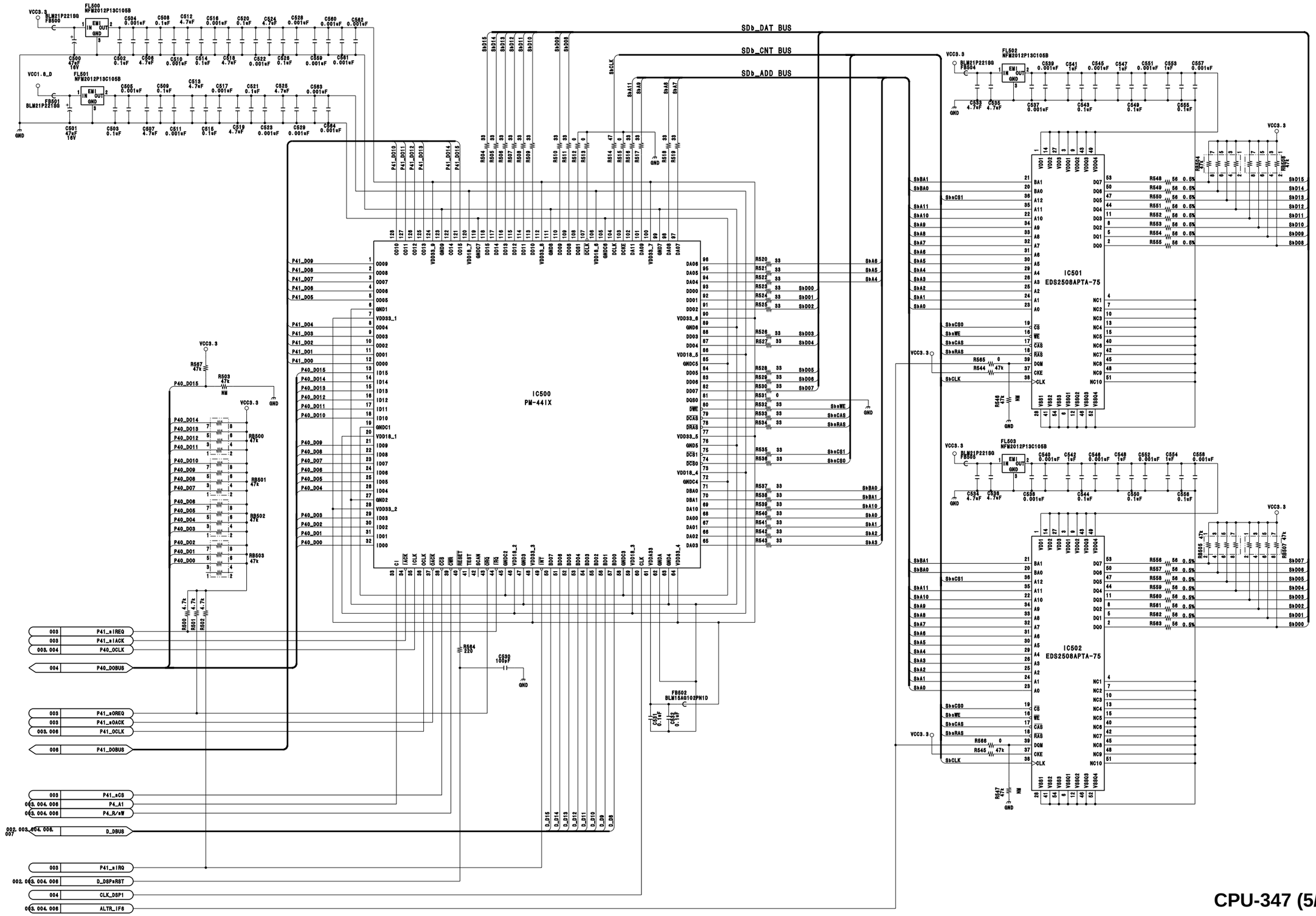
SDb_DAT BUS
SDb_CNT BUS
SDb_ADD BUS
IC500
PM-441X
IC501
EDS2508APTA-75
IC502
EDS2508APTA-75
FL500
NFM2012P13C105B
FL501
NFM2012P13C105B
FL502
NFM2012P13C105B
FL503
NFM2012P13C105B
FB502
BLM15AG102PN1D
VCC3.3
GND
P41_nIREQ
P41_nIACK
P40_OCLK
P40_DOBUS
P41_nOREQ
P41_nOACK
P41_OCLK
P41_DOBUS
P41_nCS
P4_A1
P4_R/nW
D_DBUS
P41_nIRQ
D_DSPnRST
CLK_DSP1
ALTR_IF6

 CPU-347 (6/11)

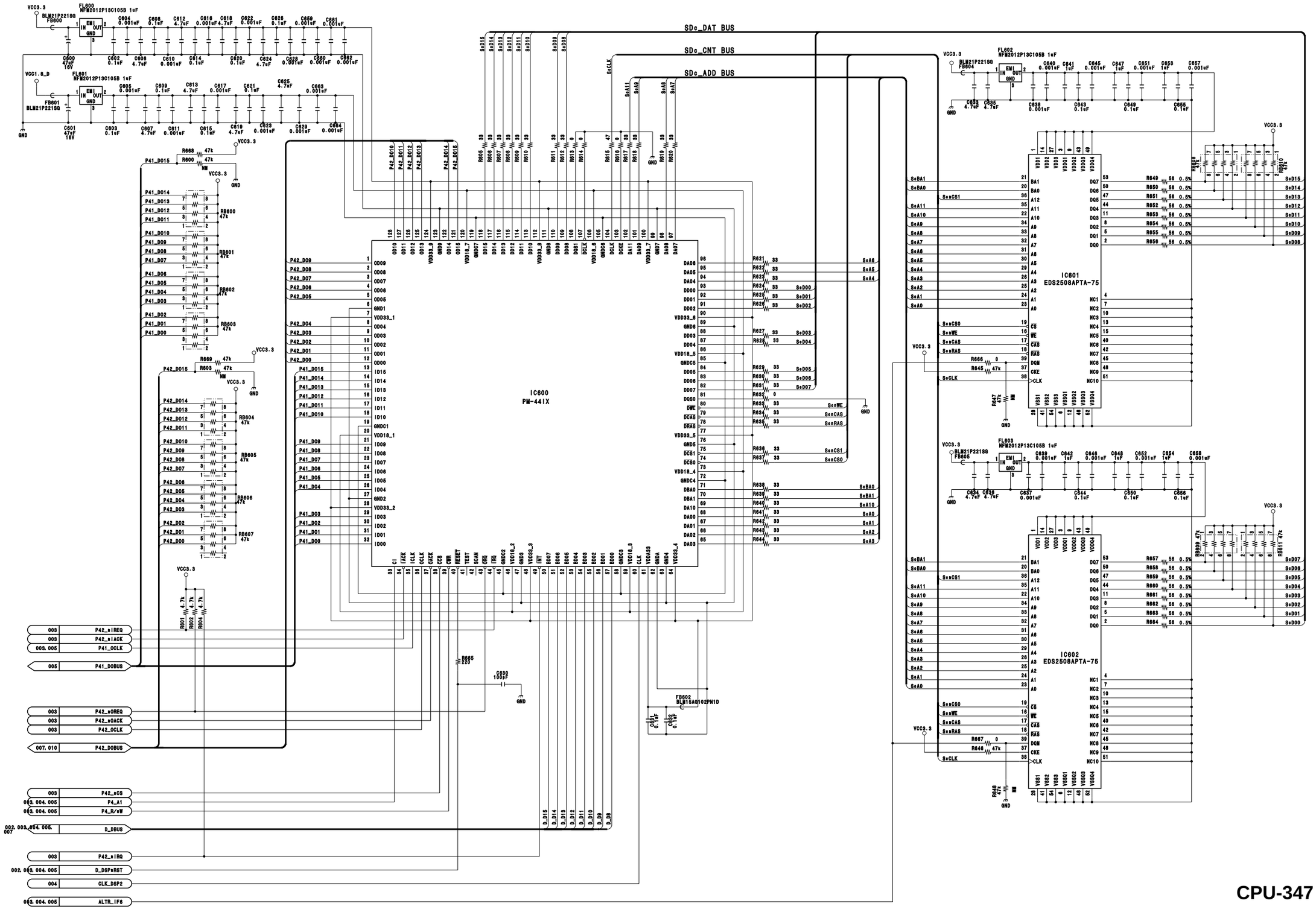
SDc_DAT BUS
SDc_CNT BUS
SDc_ADD BUS
IC600
PM-441X
IC601
EDS2508APTA-75
IC602
EDS2508APTA-75
P42_nIREQ
P42_nIACK
P41_OCLK
P41_DOBUS
P42_nOREQ
P42_nOACK
P42_OCLK
P42_DOBUS
P42_nCS
P4_A1
P4_R/nW
D_DBUS
P42_nIRQ
D_DSPnRST
CLK_DSP2
ALTR_IF6

 CPU-347 (7/11)

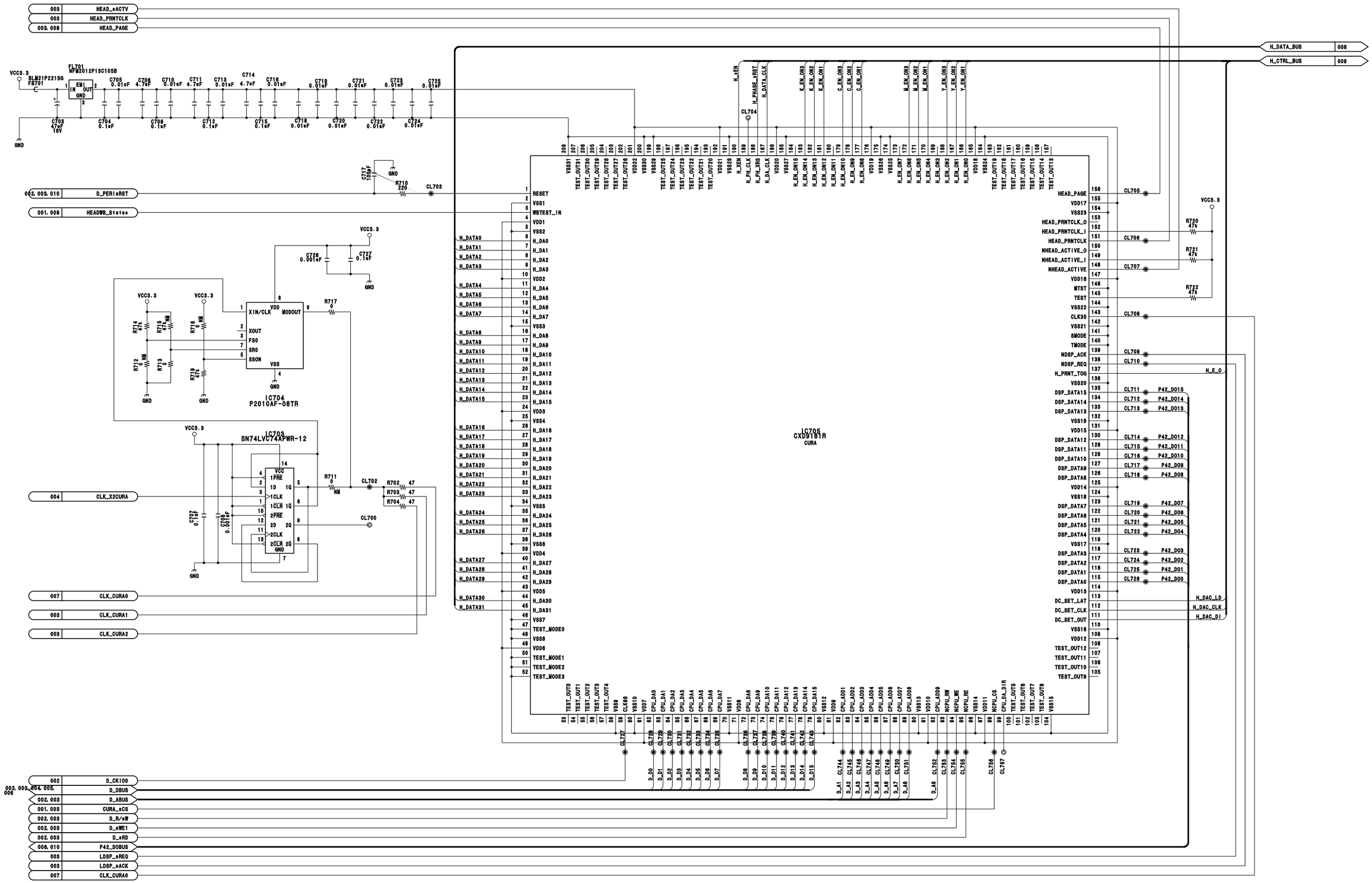
IC705
CXD9181R
CURA
IC704
P2010AF-08TR
IC703
SN74LVC74APWR-12
H_DATA_BUS
H_CTRL_BUS
HEAD_nACTV
HEAD_PRNTCLK
HEAD_PAGE
D_PERIsRST
HEADWB_Status
CLK_X2CURA
CLK_CURA0
CLK_CURA1
CLK_CURA2
D_CK100
D_DBUS
D_ABUS
CURA_nCS
D_R/nW
D_nWE1
D_nRD
P42_DOBUS
LDSP_nREQ
LDSP_nACK
H_DAC_LD
H_DAC_CLK
H_DAC_DI

 CPU-347 (8/11)

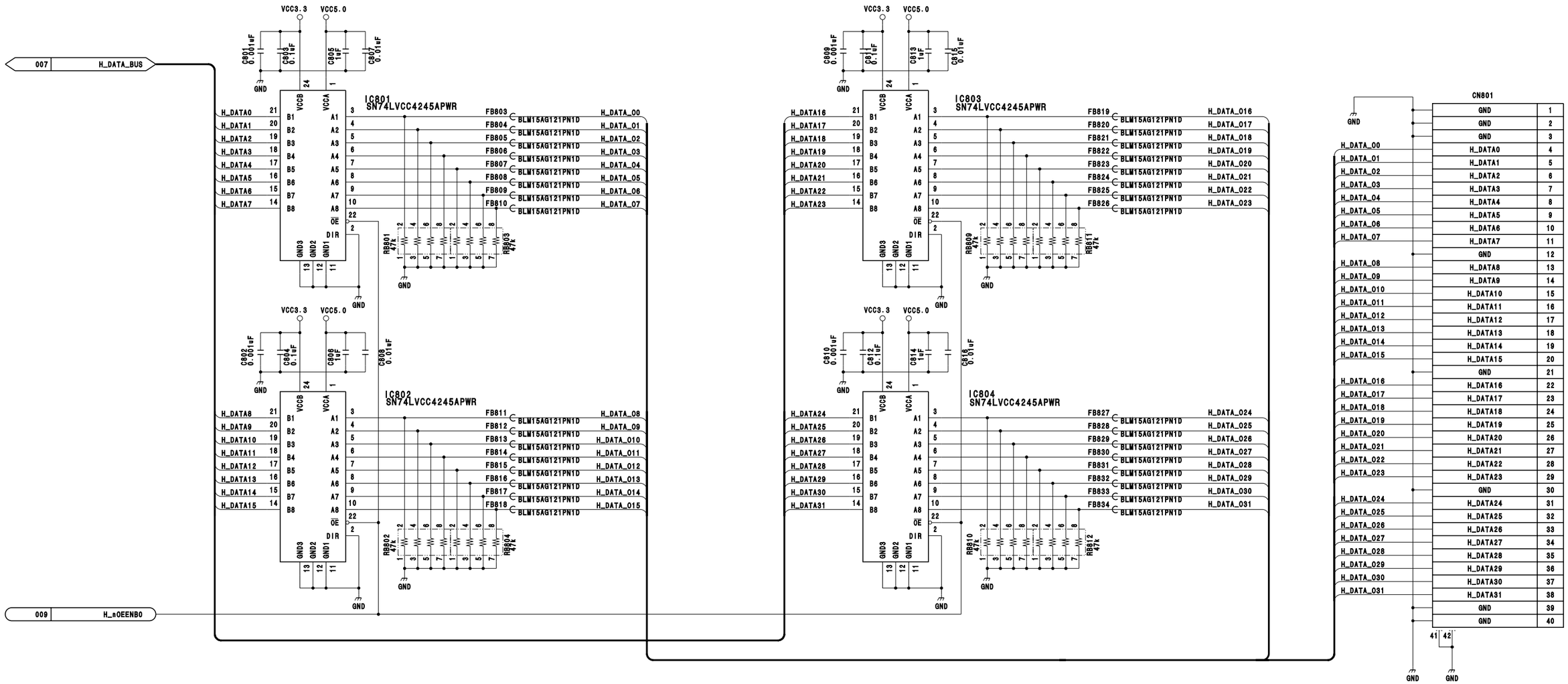

 8-11

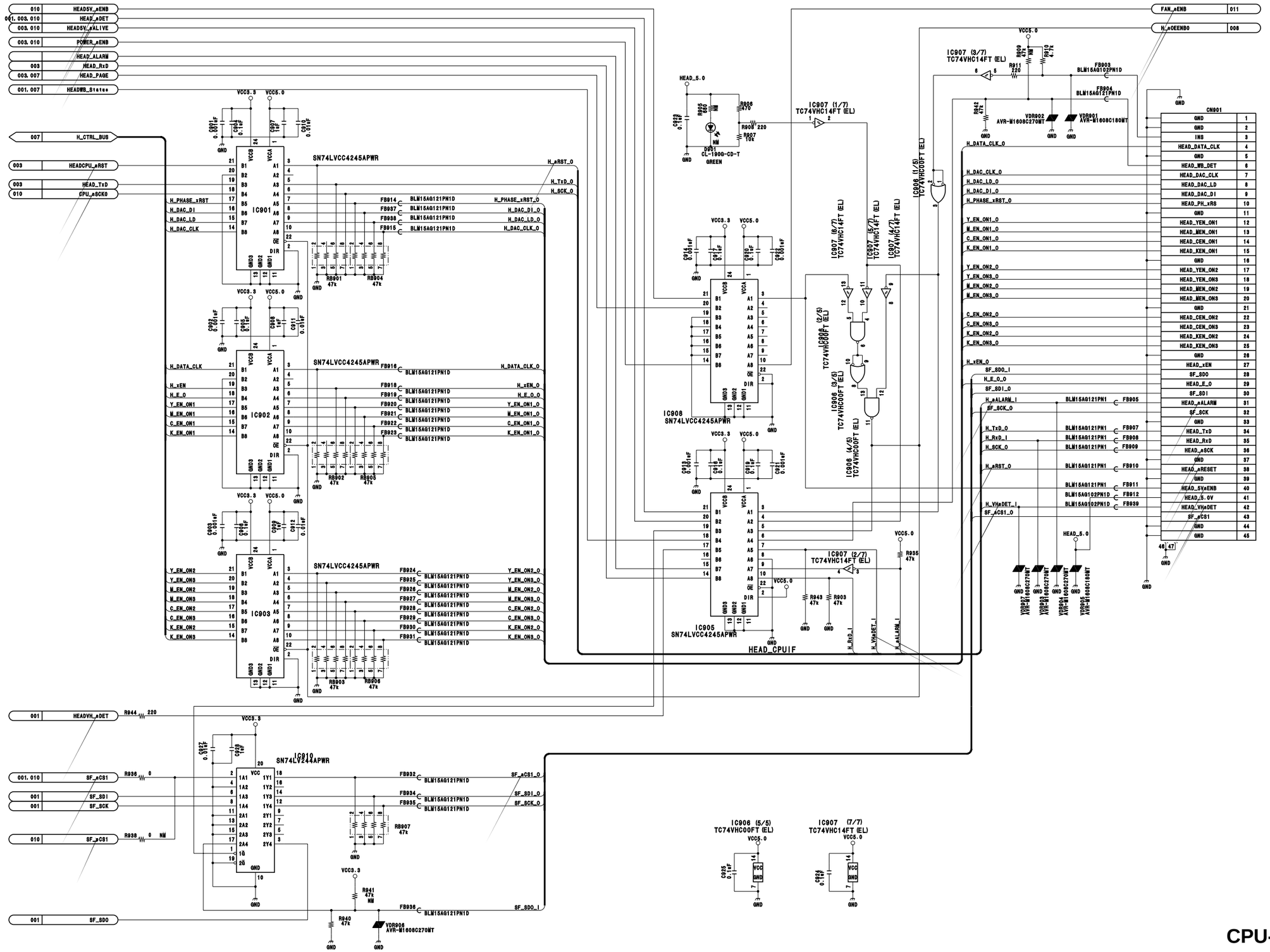
HEAD5V_aENB
HEAD_aDET
HEAD5V_aALIVE
POWER_aENB
HEAD_aLARM
HEAD_RxD
HEAD_PAGE
HEADWB_Status
H_CTRL_BUS
HEADCPU_aRST
HEAD_TxD
CPU_aSCK0
SN74LVCC4245APWR
IC901
IC902
IC903
IC905
IC906 (1/5) TC74VHC00FT (EL)
IC906 (2/5) TC74VHC00FT (EL)
IC906 (3/5) TC74VHC00FT (EL)
IC906 (4/5) TC74VHC00FT (EL)
IC906 (5/5) TC74VHC00FT (EL)
IC907 (1/7) TC74VHC14FT (EL)
IC907 (2/7) TC74VHC14FT (EL)
IC907 (3/7) TC74VHC14FT (EL)
IC907 (4/7) TC74VHC14FT (EL)
IC907 (5/7) TC74VHC14FT (EL)
IC907 (6/7) TC74VHC14FT (EL)
IC907 (7/7) TC74VHC14FT (EL)
IC908 SN74LVCC4245APWR
IC910 SN74LV244APWR
HEAD_CPUIF
CN901
FAN_aENB
H_aOEENB0
HEADVH_aDET
SF_aCS1
SF_SDI
SF_SCK
SF_SDO

 CPU-347 (10/11)

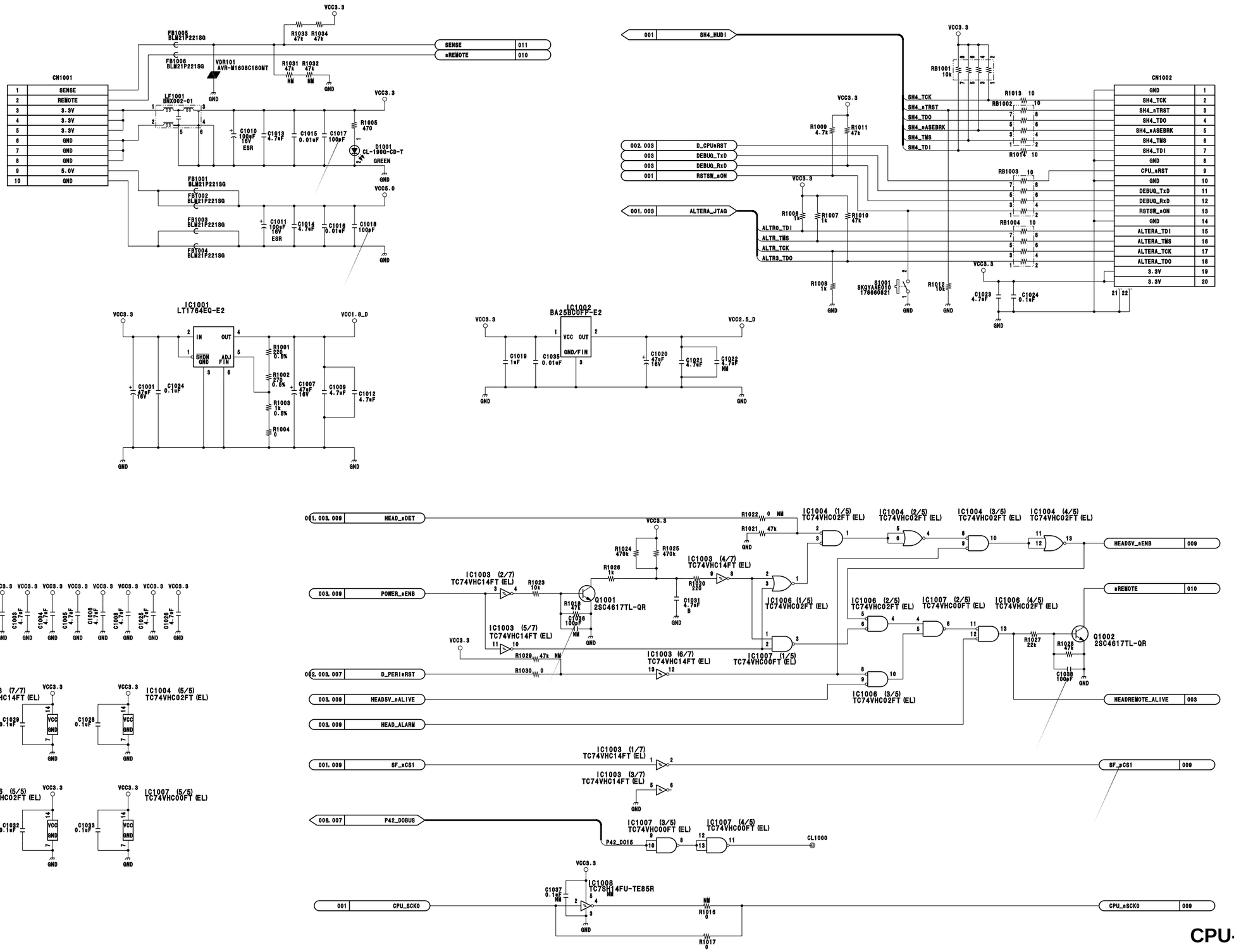
CN1001
1 SENSE
2 REMOTE
3 3.3V
4 3.3V
5 3.3V
6 GND
7 GND
8 GND
9 5.0V
10 GND
SENSE 011
nREMOTE 010
VCC3.3
R1033 47k
R1034 47k
FB1005 BLM21P221SG
FB1006 BLM21P221SG
VDR101 AVR-M1608C180MT
R1031 47k NM
R1032 47k NM
GND
LF1001 BNX002-01
C1010 100uF 16V ESR
C1013 4.7uF
C1015 0.01uF
C1017 100pF
R1005 470
D1001 SL-190G-CD-T GREEN
VCC5.0
FB1001 BLM21P221SG
FB1002 BLM21P221SG
FB1003 BLM21P221SG
FB1004 BLM21P221SG
C1011 100uF 16V ESR
C1014 4.7uF
C1016 0.01uF
C1018 100pF
001 SH4_HUDI
002, 003 D_CPUnRST
003 DEBUG_TxD
003 DEBUG_RxD
001 RSTSW_nON
001, 003 ALTERA_JTAG
SH4_TCK
SH4_nTRST
SH4_TDO
SH4_nASEBRK
SH4_TMS
SH4_TDI
ALTR0_TDI
ALTR_TMS
ALTR_TCK
ALTR3_TDO
RB1001 10k
RB1002 10
RB1003 10
RB1004 10
R1013 10
R1014 10
R1009 4.7k
R1011 47k
R1006 1k
R1007 1k
R1010 47k
R1008 1k
S1001 SKQYAAE010 1766600621
R1012 10k
C1023 4.7uF
C1024 0.1uF
CN1002
GND 1
SH4_TCK 2
SH4_nTRST 3
SH4_TDO 4
SH4_nASEBRK 5
SH4_TMS 6
SH4_TDI 7
GND 8
CPU_nRST 9
GND 10
DEBUG_TxD 11
DEBUG_RxD 12
RSTSW_nON 13
GND 14
ALTERA_TDI 15
ALTERA_TMS 16
ALTERA_TCK 17
ALTERA_TDO 18
3.3V 19
3.3V 20
IC1001 LT1764EQ-E2
IN OUT
SHDN GND ADJ FIN
VCC1.8_D
R1001 255 0.5%
R1002 270 0.5%
R1003 1k 0.5%
R1004 0
C1001 47uF 16V
C1034 0.1uF
C1007 47uF 16V
C1009 4.7uF
C1012 4.7uF
IC1002 BA25BC0FP-E2
VCC GND/FIN OUT
VCC2.5_D
C1019 1uF
C1035 0.01uF
C1020 47uF 16V
C1021 4.7uF
C1022 4.7uF NM
C1025 4.7uF
C1027 4.7uF
C1004 4.7uF
C1005 4.7uF
C1008 4.7uF
C1026 4.7uF
C1028 4.7uF
C1030 4.7uF
IC1003 (7/7) TC74VHC14FT (EL)
C1029 0.1uF
IC1004 (5/5) TC74VHC02FT (EL)
C1028 0.1uF
IC1006 (5/5) TC74VHC02FT (EL)
C1032 0.1uF
IC1007 (5/5) TC74VHC00FT (EL)
C1033 0.1uF
VCC GND
001, 003, 009 HEAD_nDET
003, 009 POWER_nENB
002, 003, 007 D_PERIrRST
003, 009 HEAD5V_nALIVE
003, 009 HEAD_ALARM
001, 009 SF_nCS1
006, 007 P42_DOBUS
001 CPU_SCK0
R1022 0 NM
R1021 47k
IC1004 (1/5) TC74VHC02FT (EL)
IC1004 (2/5) TC74VHC02FT (EL)
IC1004 (3/5) TC74VHC02FT (EL)
IC1004 (4/5) TC74VHC02FT (EL)
HEAD5V_nENB 009
R1024 470k
R1025 470k
IC1003 (4/7) TC74VHC14FT (EL)
R1026 1k
R1020 220
C1031 4.7uF 6
IC1003 (2/7) TC74VHC14FT (EL)
R1023 10k
R1018 47k
Q1001 2SC4617TL-QR
C1036 100pF NM
IC1006 (1/5) TC74VHC02FT (EL)
IC1006 (2/5) TC74VHC02FT (EL)
IC1007 (2/5) TC74VHC00FT (EL)
IC1006 (4/5) TC74VHC02FT (EL)
nREMOTE 010
R1027 22k
R1028 47k
Q1002 2SC4617TL-QR
C1038 100pF
IC1003 (5/7) TC74VHC14FT (EL)
R1029 47k NM
R1030 0
IC1003 (6/7) TC74VHC14FT (EL)
IC1007 (1/5) TC74VHC00FT (EL)
IC1006 (3/5) TC74VHC02FT (EL)
HEADREMOTE_ALIVE 003
IC1003 (1/7) TC74VHC14FT (EL)
SF_nCS1 009
IC1003 (3/7) TC74VHC14FT (EL)
IC1007 (3/5) TC74VHC00FT (EL)
IC1007 (4/5) TC74VHC00FT (EL)
P42_D015
CL1000
IC1008 TC7SH14FU-TE85R NM
C1037 0.1uF NM
R1016 0 NM
R1017 0
CPU_nSCK0 009

 CPU-347 (11/11)

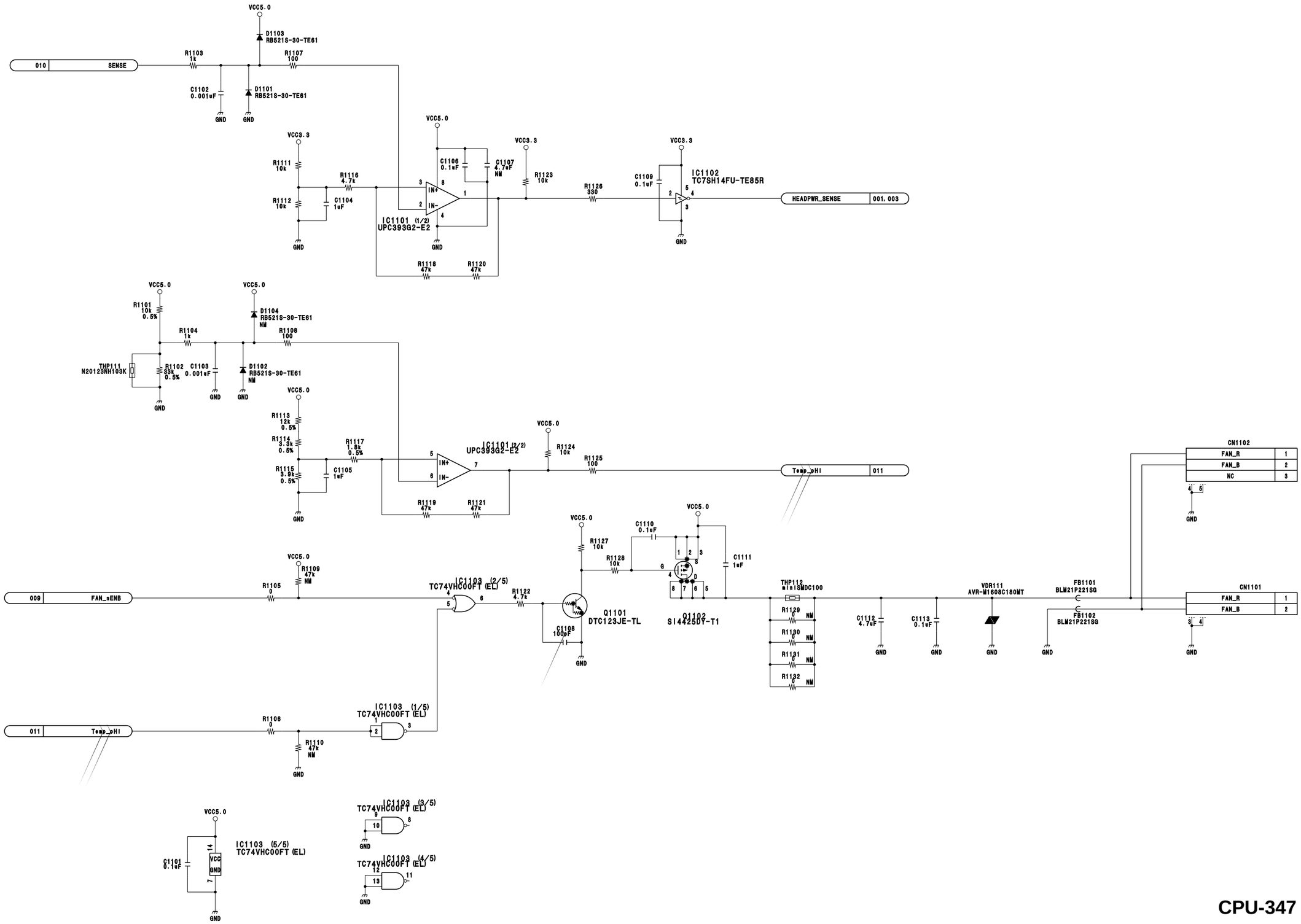
010 SENSE
R1103 1k
R1107 100
D1103 RB521S-30-TE61
D1101 RB521S-30-TE61
C1102 0.001uF
VCC5.0
VCC3.3
GND
R1111 10k
R1112 10k
R1116 4.7k
C1104 1uF
C1106 0.1uF
C1107 4.7uF NM
R1123 10k
R1126 330
C1109 0.1uF
IC1102 TC7SH14FU-TE85R
HEADPWR_SENSE 001, 003
IC1101 (1/2) UPC393G2-E2
R1118 47k
R1120 47k
R1101 10k 0.5%
R1104 1k
D1104 RB521S-30-TE61 NM
R1108 100
THP111 N20123NH103K
R1102 33k 0.5%
C1103 0.001uF
D1102 RB521S-30-TE61 NM
R1113 12k 0.5%
R1114 3.3k 0.5%
R1115 3.9k 0.5%
R1117 1.8k 0.5%
C1105 1uF
IC1101 (2/2) UPC393G2-E2
R1124 10k
R1125 100
Temp_pHI 011
R1119 47k
R1121 47k
CN1102
FAN_R 1
FAN_B 2
NC 3
R1127 10k
R1128 10k
C1110 0.1uF
C1111 1uF
Q1101 DTC123JE-TL
Q1102 SI4425DY-T1
C1108 100pF
R1109 47k NM
R1105 0
009 FAN_nENB
IC1103 (2/5) TC74VHC00FT (EL)
R1122 4.7k
THP112 nlnISMDC100
R1129 0 NM
R1130 0 NM
R1131 0 NM
R1132 0 NM
C1112 4.7uF
C1113 0.1uF
VDR111 AVR-M1608C180MT
FB1101 BLM21P221SG
FB1102 BLM21P221SG
CN1101
FAN_R 1
FAN_B 2
R1106 0
R1110 47k NM
IC1103 (1/5) TC74VHC00FT (EL)
C1101 0.1uF
IC1103 (5/5) TC74VHC00FT (EL)
IC1103 (3/5) TC74VHC00FT (EL)
IC1103 (4/5) TC74VHC00FT (EL)

 CPU-357 (1/18)

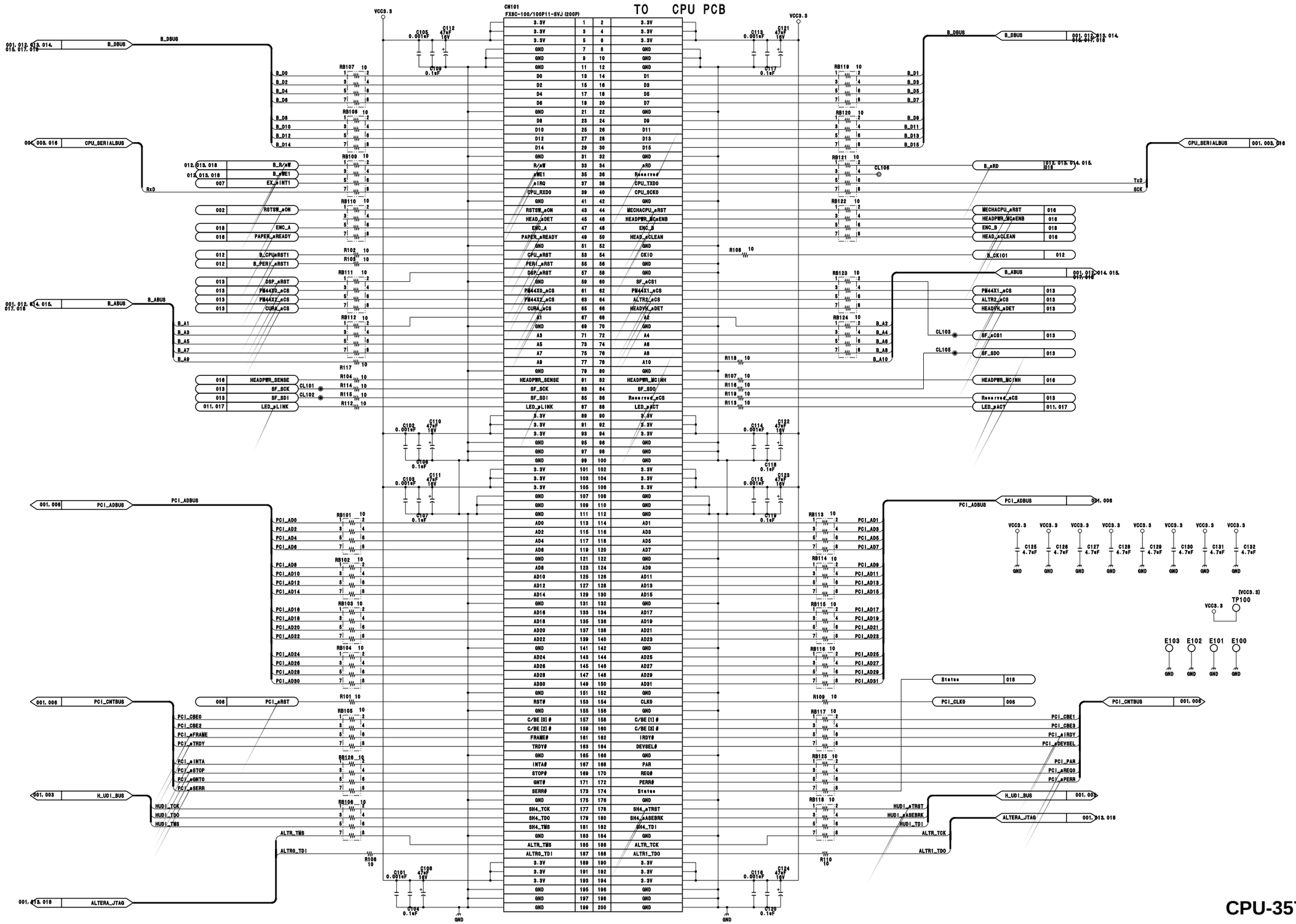
TO CPU PCB
CN101
FX8C-100/100P11-SVJ (200P)
B_DBUS
CPU_SERIALBUS
B_ABUS
PCI_ADBUS
PCI_CNTBUS
H_UDI_BUS
ALTERA_JTAG
VCC3.3
TP100
E103 E102 E101 E100
GND

 CPU-357 (2/18)

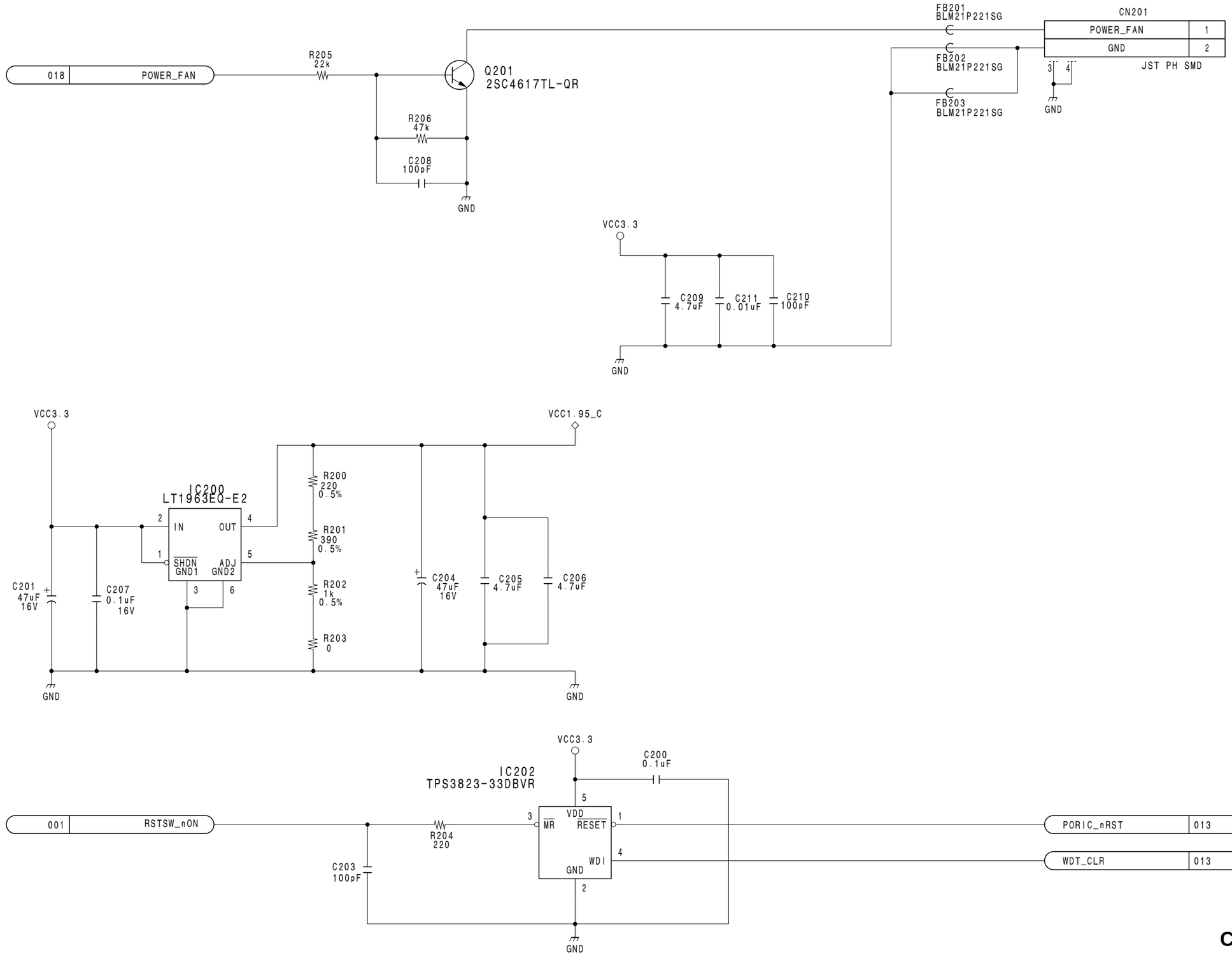

CPU-357 (2/18)

 8-16

CPU-357 (3/18)

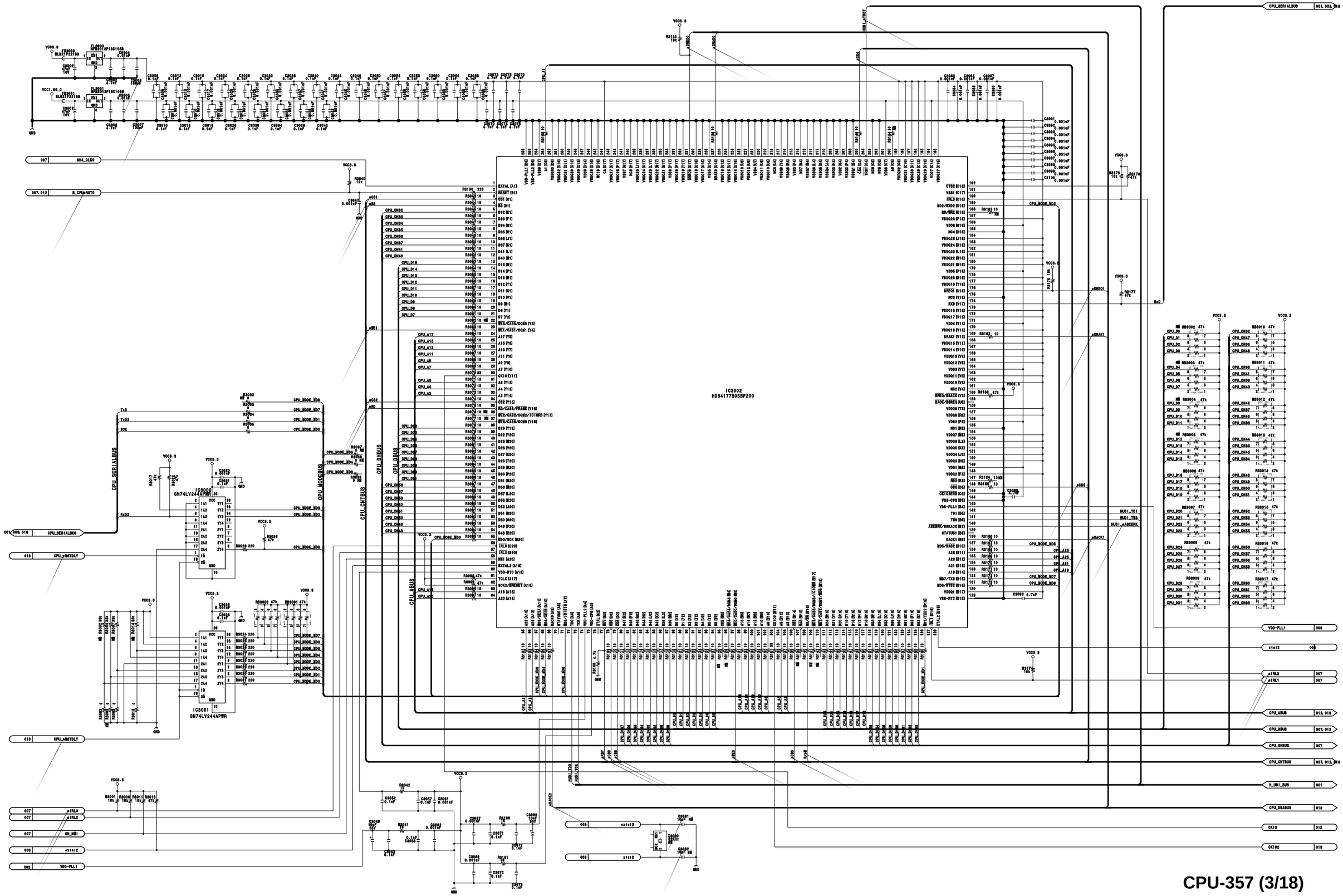

8-17

A B C D E F G H

 CPU-357 (4/18)

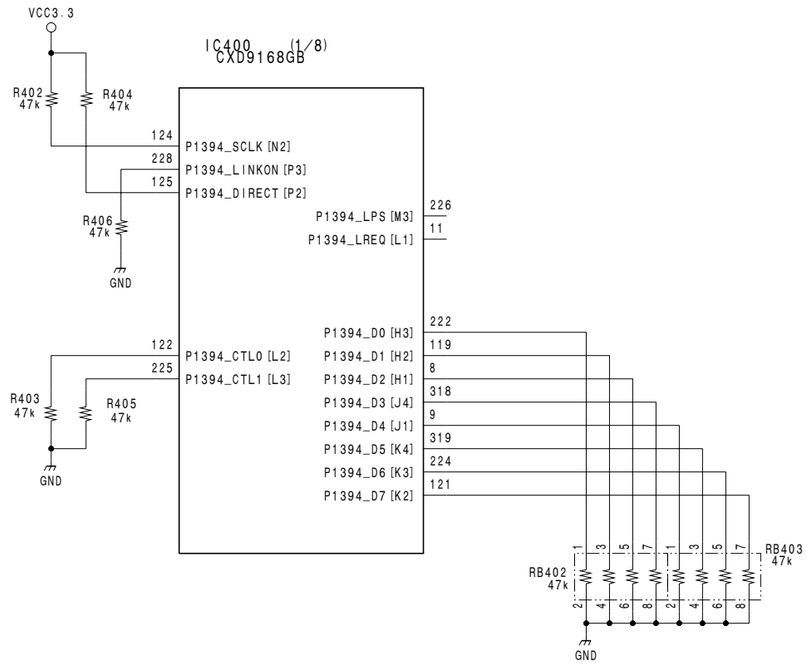

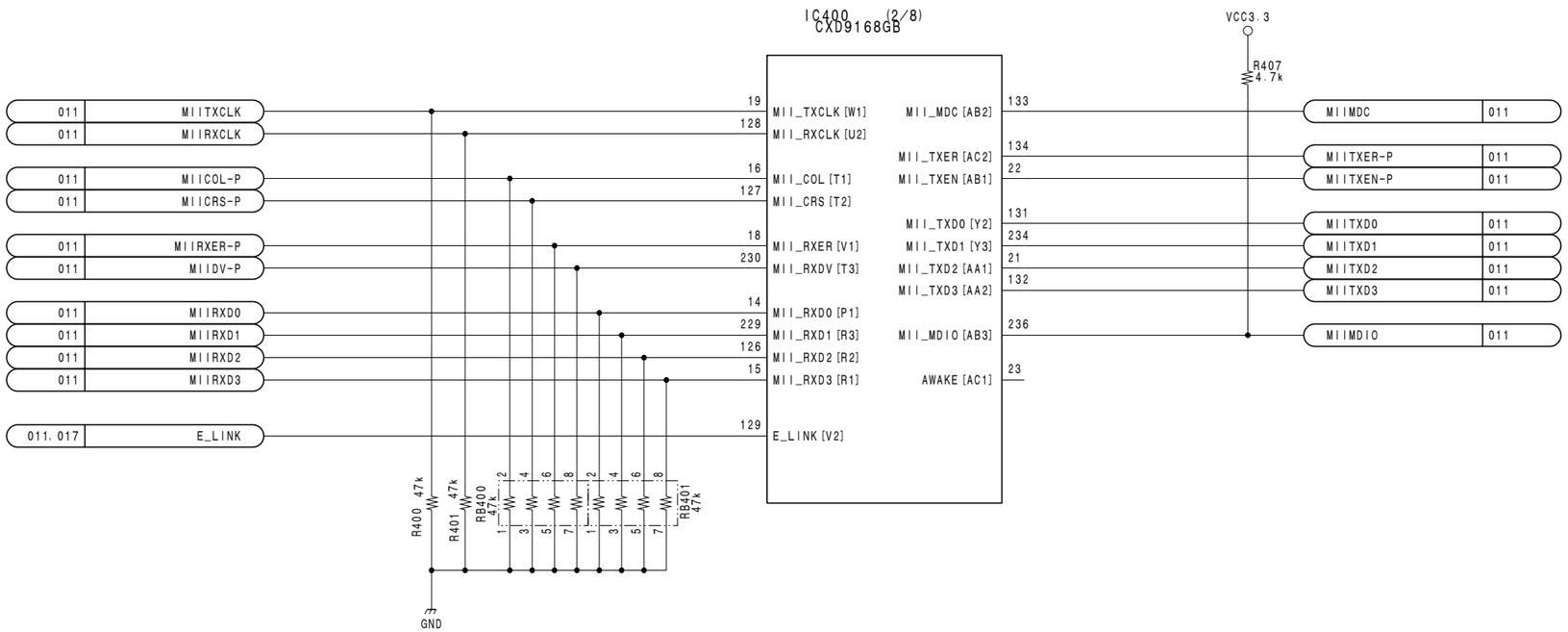

CPU-357 (4/18)

 8-18

 CPU-357 (5/18)

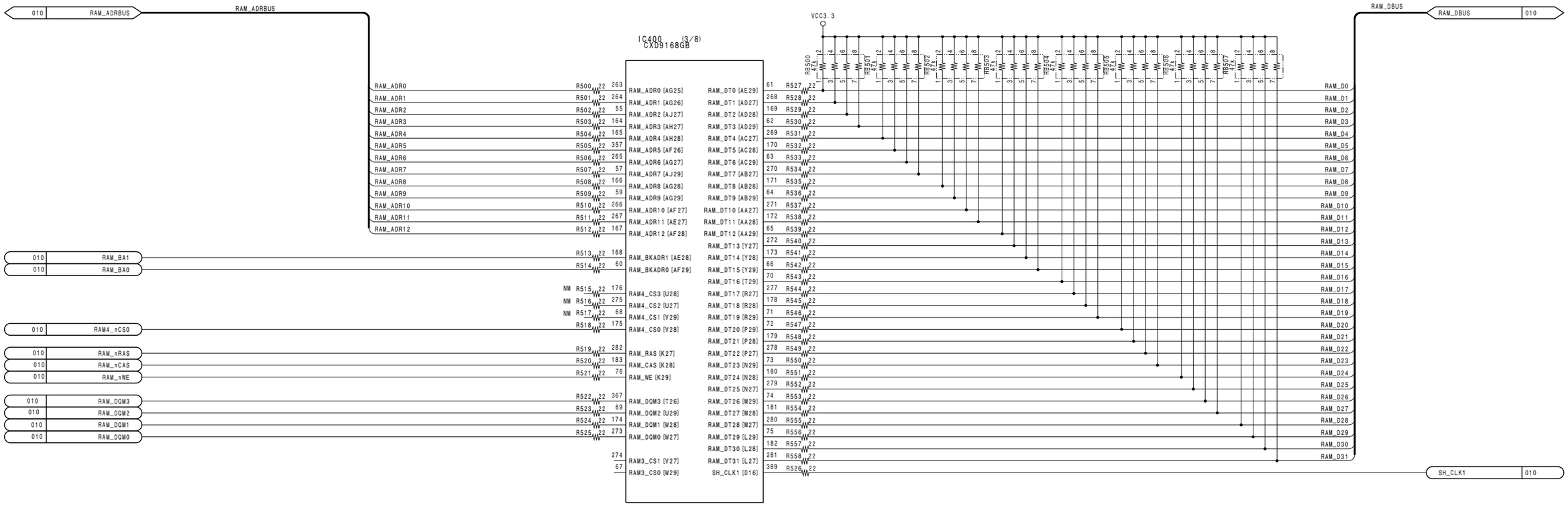

CPU-357 (5/18)

 8-19

 CPU-357 (6/18)

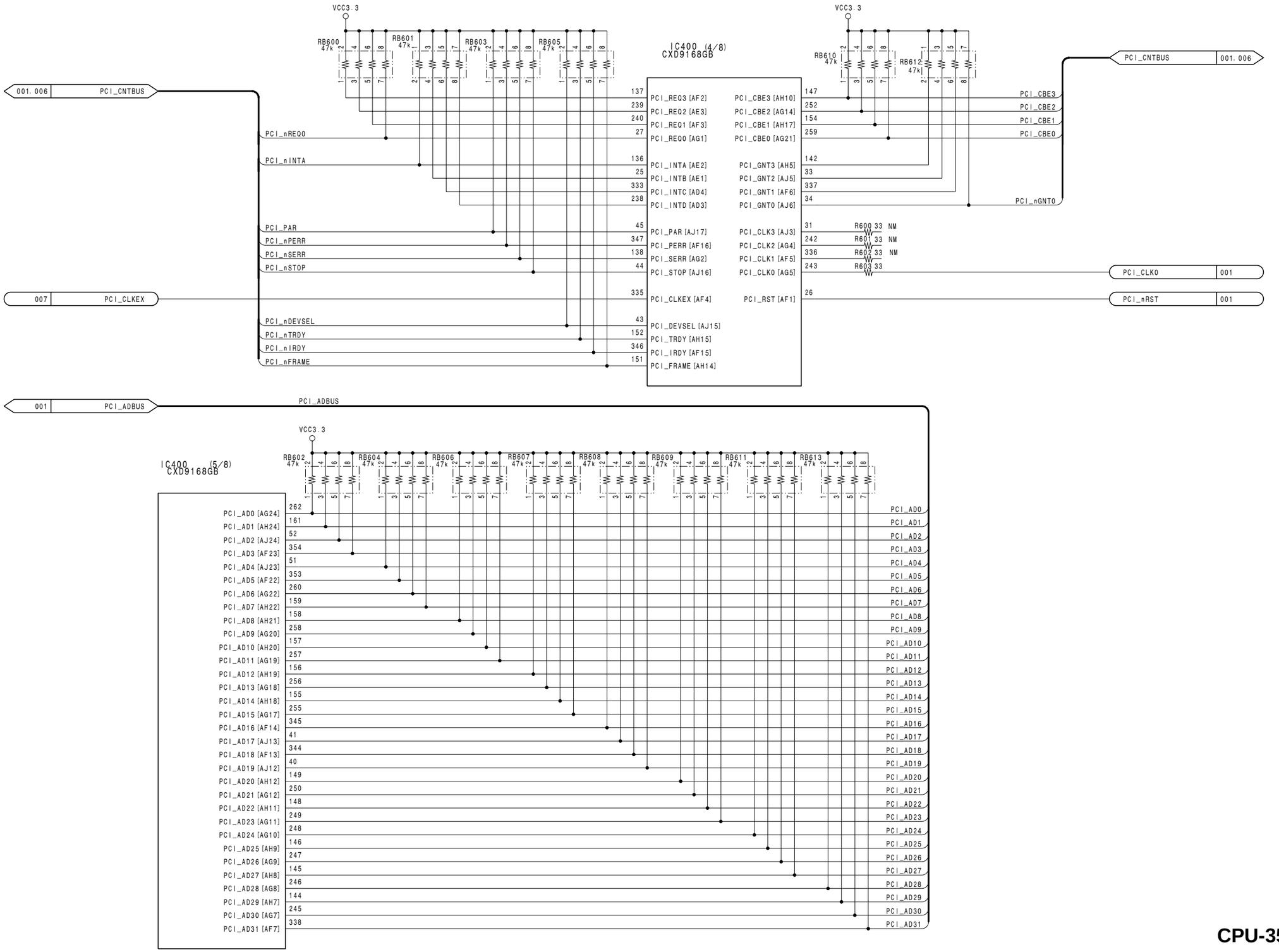

CPU-357 (6/18)

 8-20

 CPU-357 (7/18)

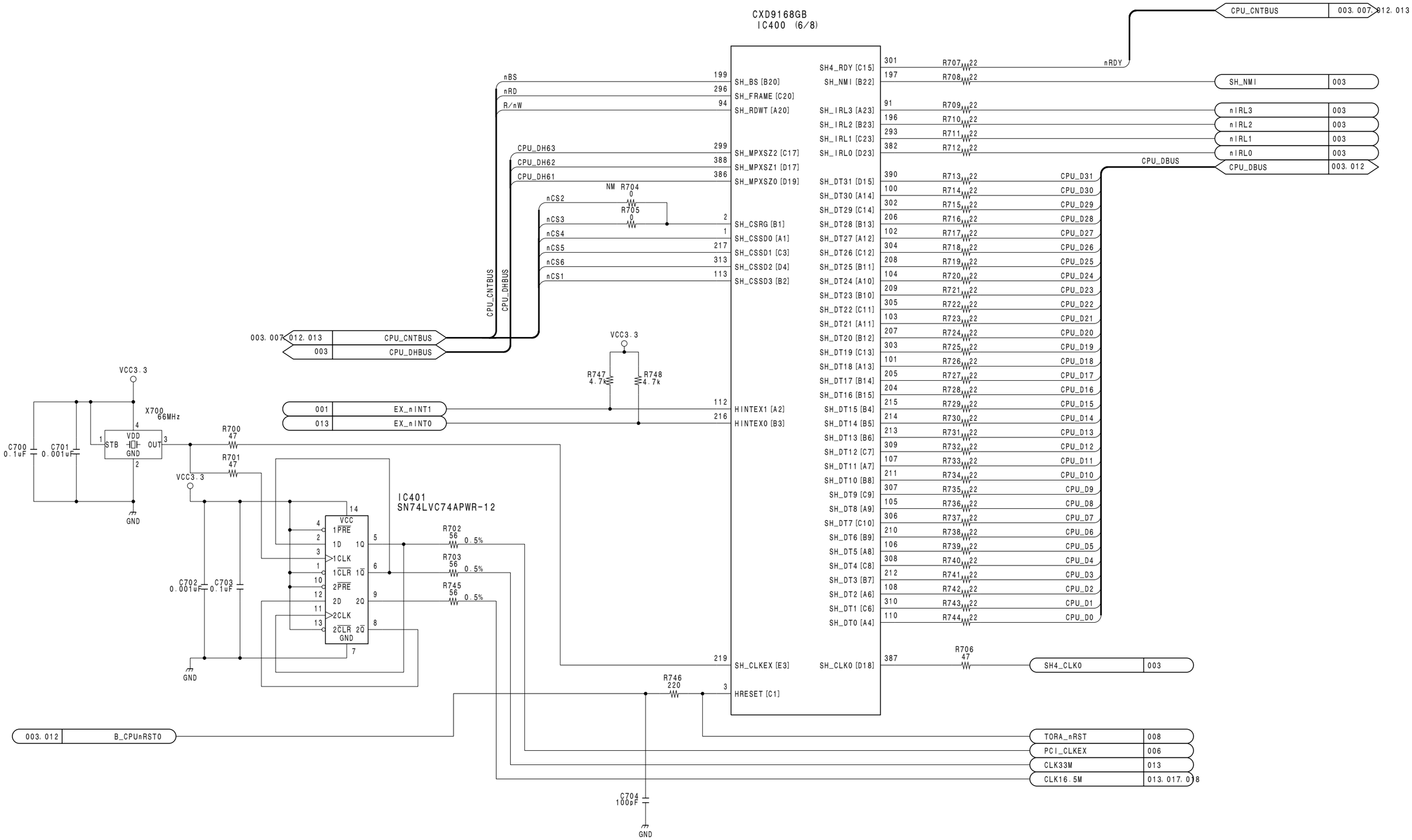
CXD9168GB
IC400 (6/8)
CPU_CNTBUS 003, 007, 012, 013
SH_NMI 003
nIRL3 003
nIRL2 003
nIRL1 003
nIRL0 003
CPU_DBUS 003, 012
SH4_CLK0 003
TORA_nRST 008
PCI_CLKEX 006
CLK33M 013
CLK16.5M 013, 017, 018
003, 012 B_CPUnRST0
003, 007, 012, 013 CPU_CNTBUS
003 CPU_DHBUS
001 EX_nINT1
013 EX_nINT0
nBS
nRD
R/nW
CPU_DH63
CPU_DH62
CPU_DH61
nCS2
nCS3
nCS4
nCS5
nCS6
nCS1
NM R704 0
R705 0
R707 22
R708 22
R709 22
R710 22
R711 22
R712 22
R713 22
R714 22
R715 22
R716 22
R717 22
R718 22
R719 22
R720 22
R721 22
R722 22
R723 22
R724 22
R725 22
R726 22
R727 22
R728 22
R729 22
R730 22
R731 22
R732 22
R733 22
R734 22
R735 22
R736 22
R737 22
R738 22
R739 22
R740 22
R741 22
R742 22
R743 22
R744 22
R746 220
R747 4.7k
R748 4.7k
R700 47
R701 47
R702 56 0.5%
R703 56 0.5%
R745 56 0.5%
R706 47
VCC3.3
X700 66MHz
VDD
STB
OUT
GND
C700 0.1uF
C701 0.001uF
C702 0.001uF
C703 0.1uF
C704 100pF
IC401
SN74LVC74APWR-12
VCC
1PRE
1D
1CLK
1CLR
1Q
2PRE
2D
2CLK
2CLR
2Q
SH4_RDY [C15]
SH_BS [B20]
SH_NMI [B22]
SH_FRAME [C20]
SH_RDWT [A20]
SH_IRL3 [A23]
SH_IRL2 [B23]
SH_IRL1 [C23]
SH_IRL0 [D23]
SH_MPXSZ2 [C17]
SH_MPXSZ1 [D17]
SH_MPXSZ0 [D19]
SH_DT31 [D15]
SH_DT30 [A14]
SH_DT29 [C14]
SH_DT28 [B13]
SH_DT27 [A12]
SH_DT26 [C12]
SH_DT25 [B11]
SH_DT24 [A10]
SH_DT23 [B10]
SH_DT22 [C11]
SH_DT21 [A11]
SH_DT20 [B12]
SH_DT19 [C13]
SH_DT18 [A13]
SH_DT17 [B14]
SH_DT16 [B15]
SH_DT15 [B4]
SH_DT14 [B5]
SH_DT13 [B6]
SH_DT12 [C7]
SH_DT11 [A7]
SH_DT10 [B8]
SH_DT9 [C9]
SH_DT8 [A9]
SH_DT7 [C10]
SH_DT6 [B9]
SH_DT5 [A8]
SH_DT4 [C8]
SH_DT3 [B7]
SH_DT2 [A6]
SH_DT1 [C6]
SH_DT0 [A4]
SH_CSRG [B1]
SH_CSSD0 [A1]
SH_CSSD1 [C3]
SH_CSSD2 [D4]
SH_CSSD3 [B2]
HINTEX1 [A2]
HINTEX0 [B3]
SH_CLKEX [E3]
SH_CLK0 [D18]
HRESET [C1]
CPU_D31
CPU_D30
CPU_D29
CPU_D28
CPU_D27
CPU_D26
CPU_D25
CPU_D24
CPU_D23
CPU_D22
CPU_D21
CPU_D20
CPU_D19
CPU_D18
CPU_D17
CPU_D16
CPU_D15
CPU_D14
CPU_D13
CPU_D12
CPU_D11
CPU_D10
CPU_D9
CPU_D8
CPU_D7
CPU_D6
CPU_D5
CPU_D4
CPU_D3
CPU_D2
CPU_D1
CPU_D0

 CPU-357 (8/18)

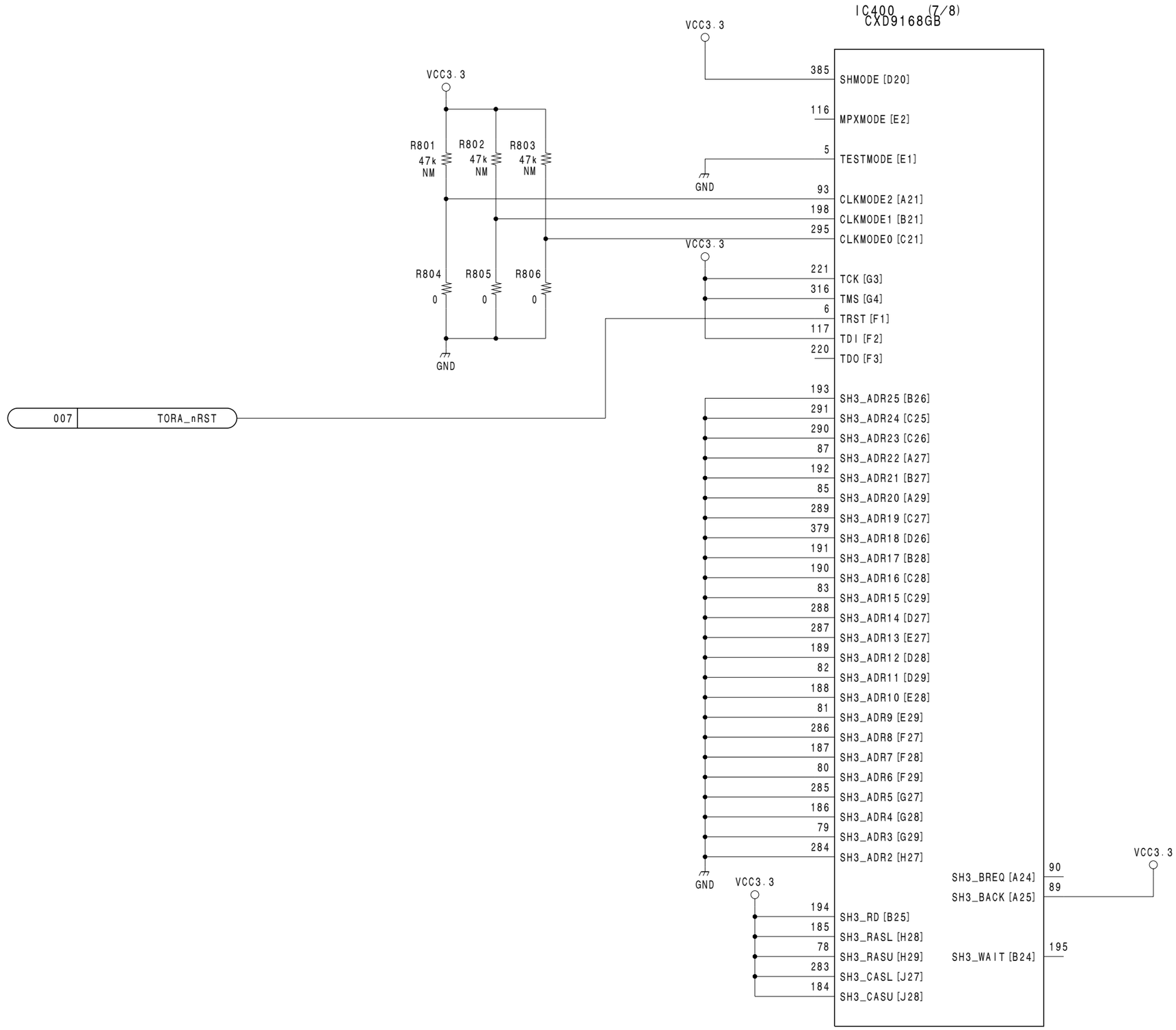

CPU-357 (8/18)

 8-22

 CPU-357 (9/18)

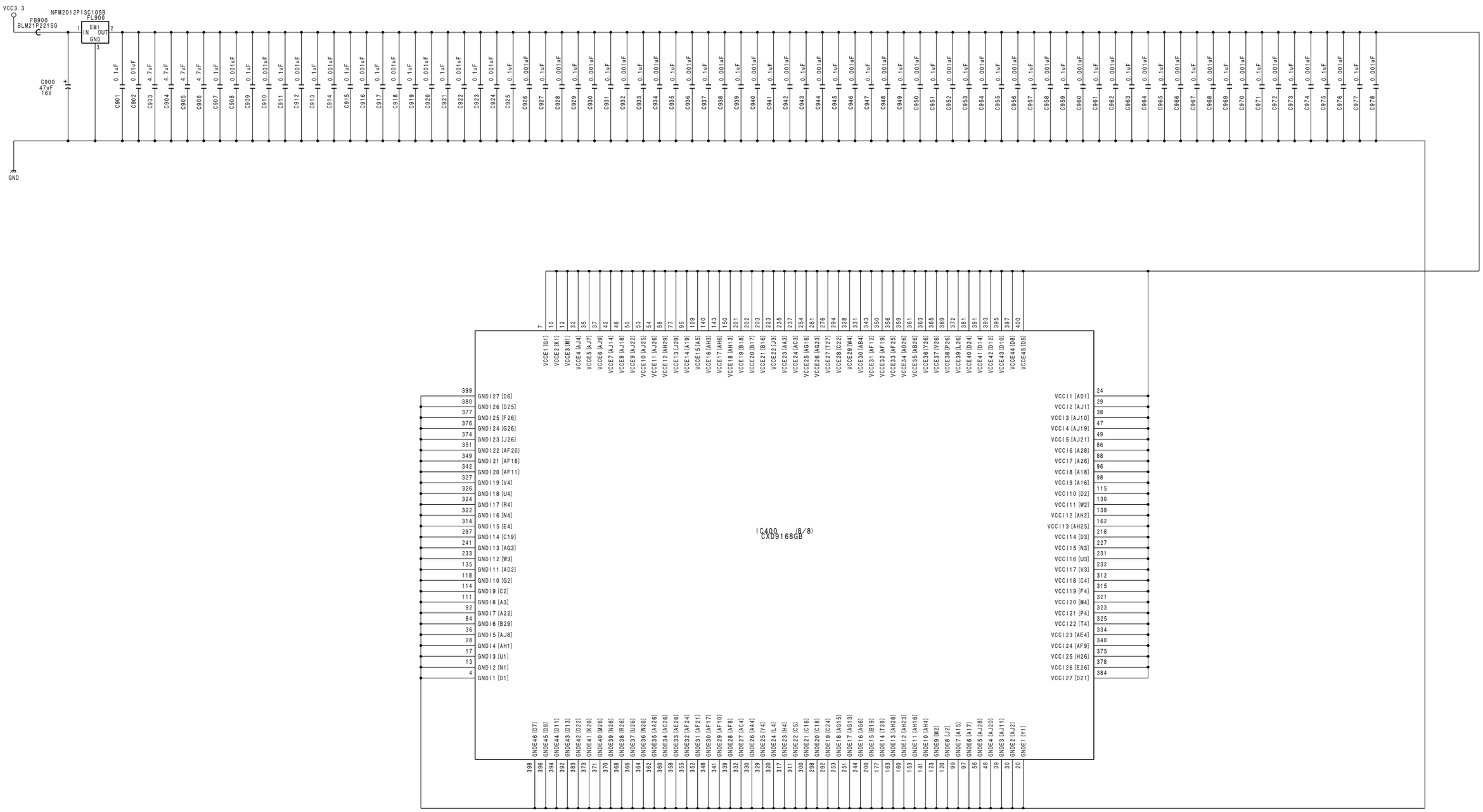

CPU-357 (9/18)

 8-23

 CPU-357 (10/18)

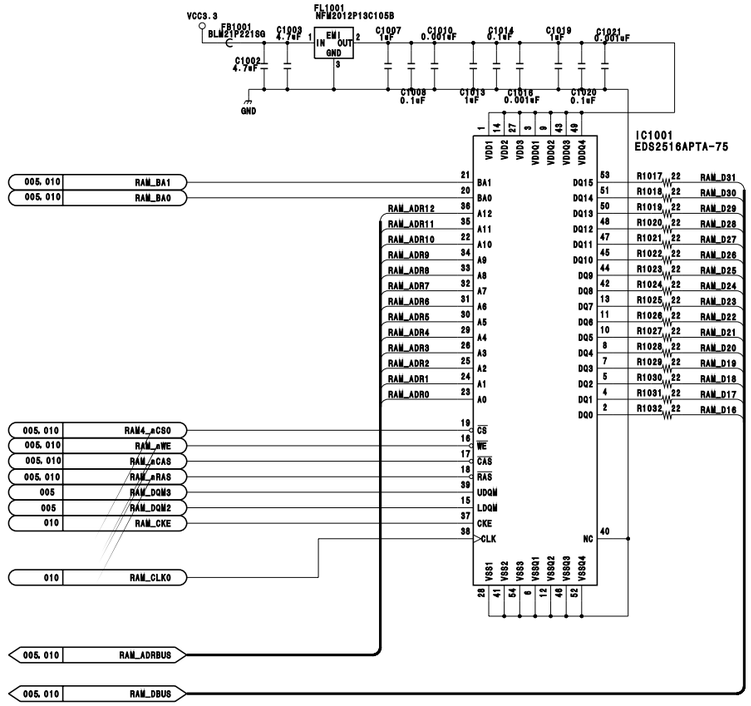

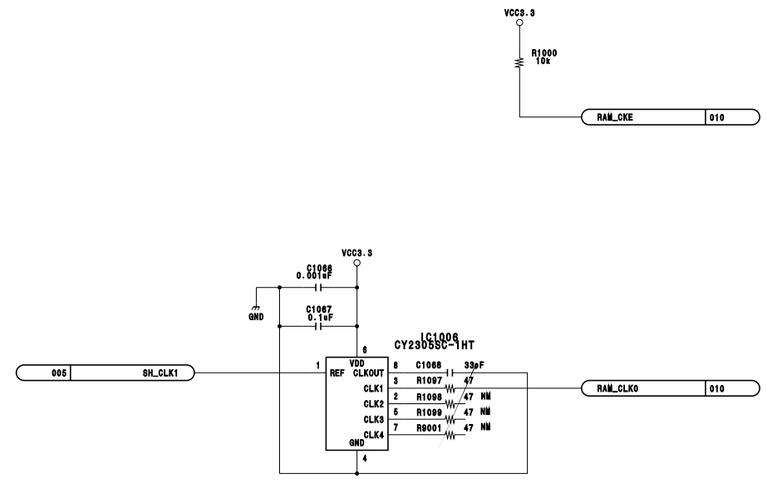

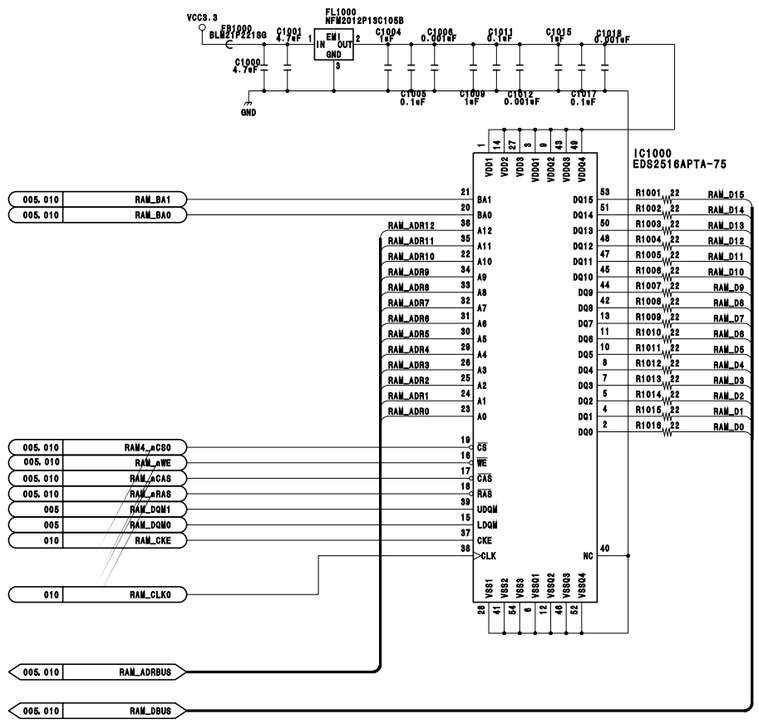

CPU-357 (10/18)

 8-24

 CPU-357 (11/18)

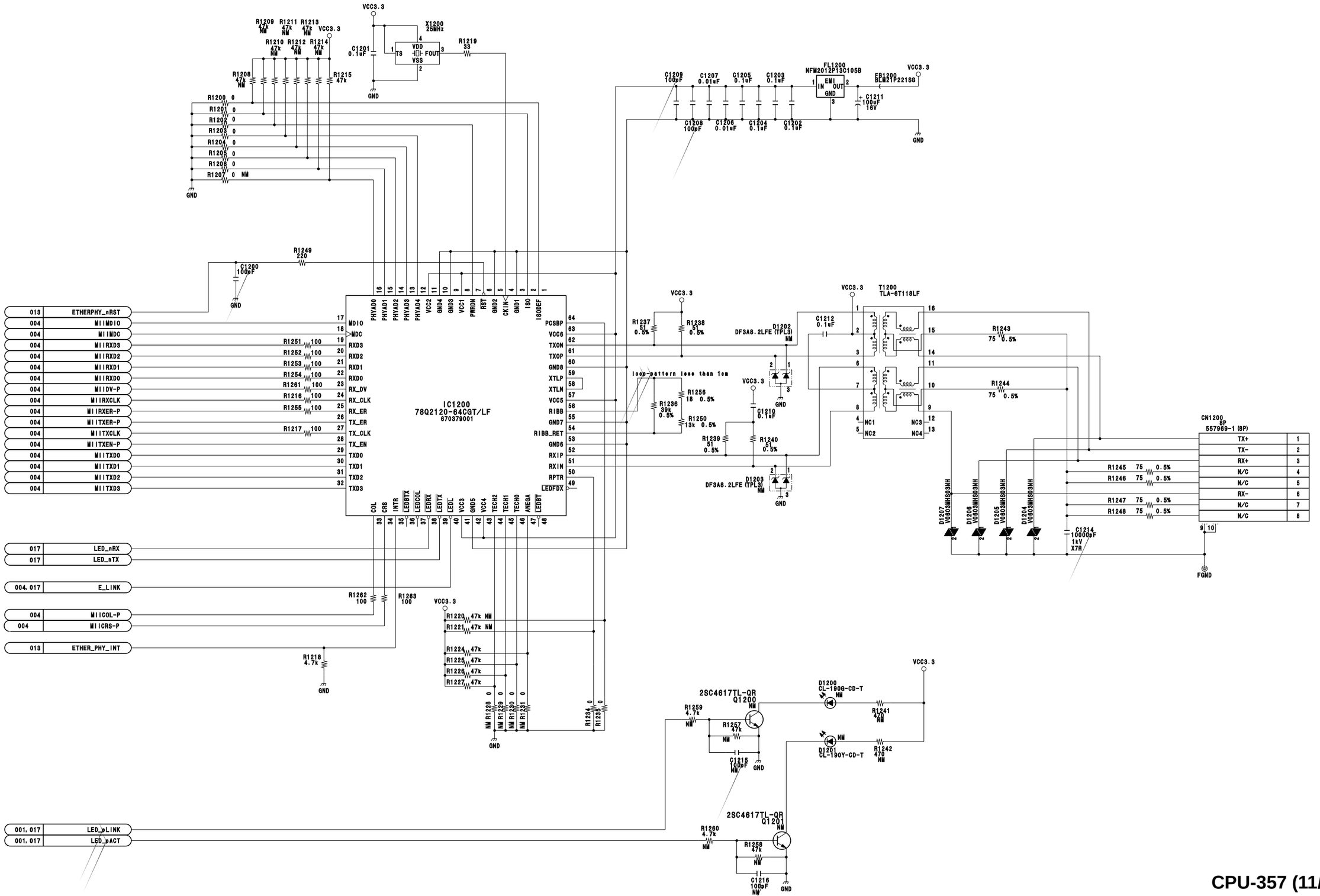

8-25

CPU-357 (11/18)

 CPU-357 (12/18)

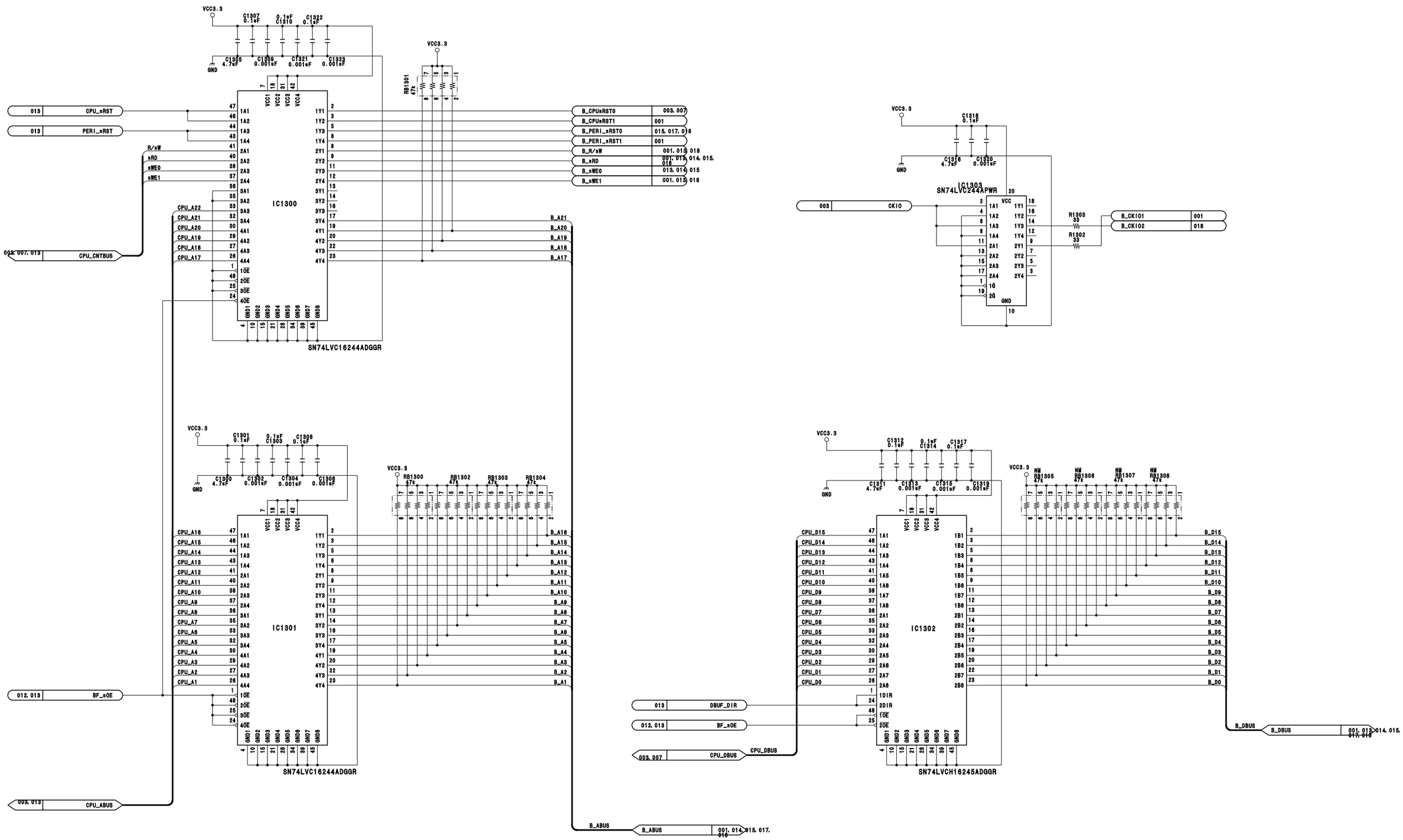

 8-26

 CPU-357 (13/18)

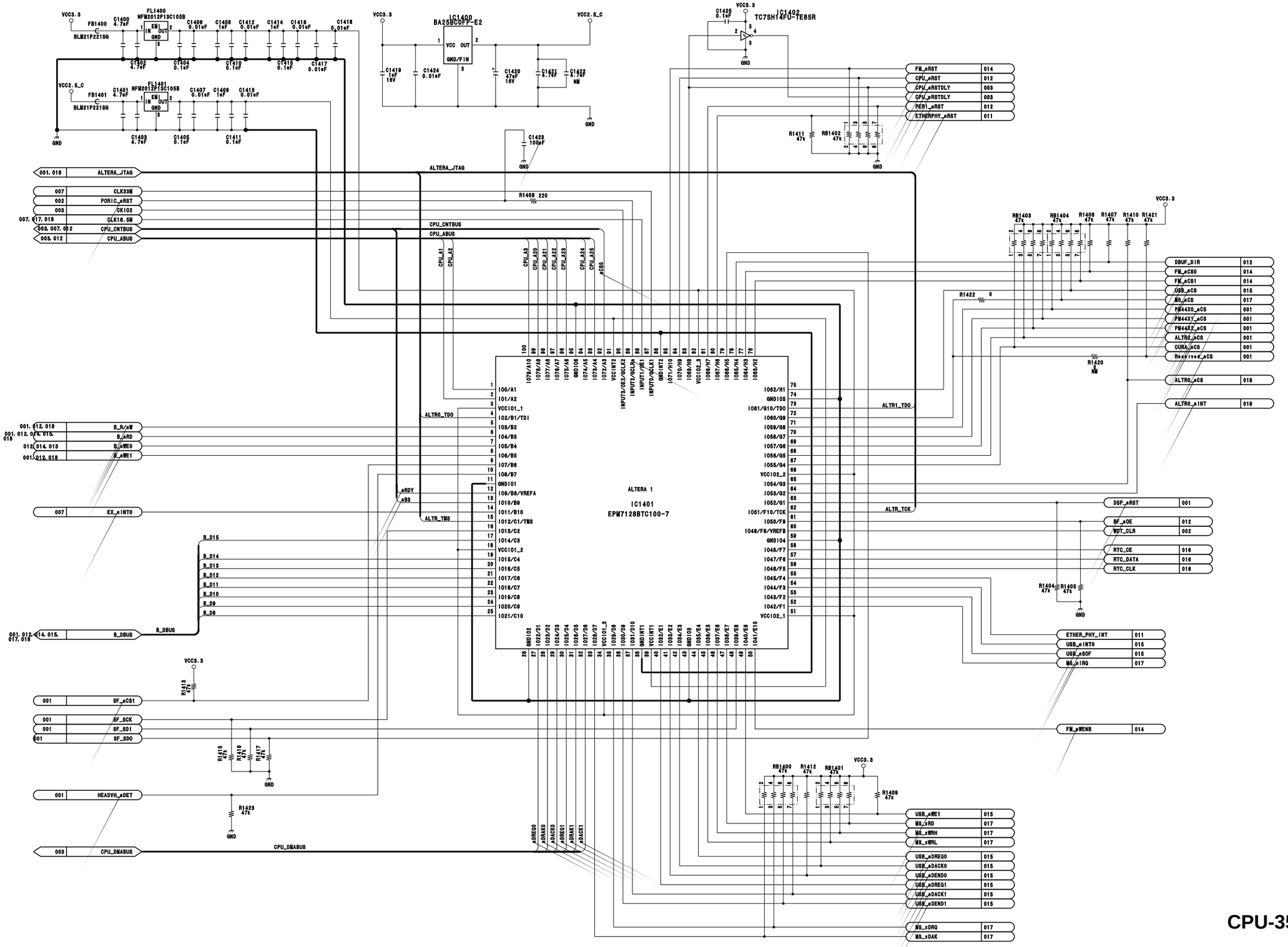
IC1401
EPM7128BTC100-7
ALTERA 1
IC1400
BA25BC0FP-E2
IC1402
TC7SH14FU-TE85R
FL1400
NFM2012P13C105B
FL1401
NFM2012P13C105B
ALTERA_JTAG
CPU_CNTBUS
CPU_ABUS
CPU_DMABUS
B_DBUS
ALTR0_TDO
ALTR1_TDO
ALTR_TCK
ALTR_TMS
FM_nRST
CPU_nRST
CPU_nRSTDLY
PER1_nRST
ETHERPHY_nRST
DBUF_DIR
FM_nCS0
FM_nCS1
USB_nCS
MS_nCS
PM44X0_nCS
PM44X1_nCS
PM44X2_nCS
ALTR2_nCS
CURA_nCS
ALTR0_nCS
ALTR0_nINT
DSP_nRST
SF_nOE
WDT_CLR
RTC_CE
RTC_DATA
RTC_CLK
ETHER_PHY_INT
USB_nINT0
USB_nSOF
MS_nIRQ
FM_nWENB
SF_nCS1
SF_SCK
SF_SDI
SF_SDO
HEADVH_nDET
USB_nWE1
MS_xRD
MS_xWRH
MS_xWRL
USB_nDREQ0
USB_nDACK0
USB_nDEND0
USB_nDREQ1
USB_nDACK1
USB_nDEND1
MS_xDRQ
MS_xDAK

 CPU-357 (14/18)

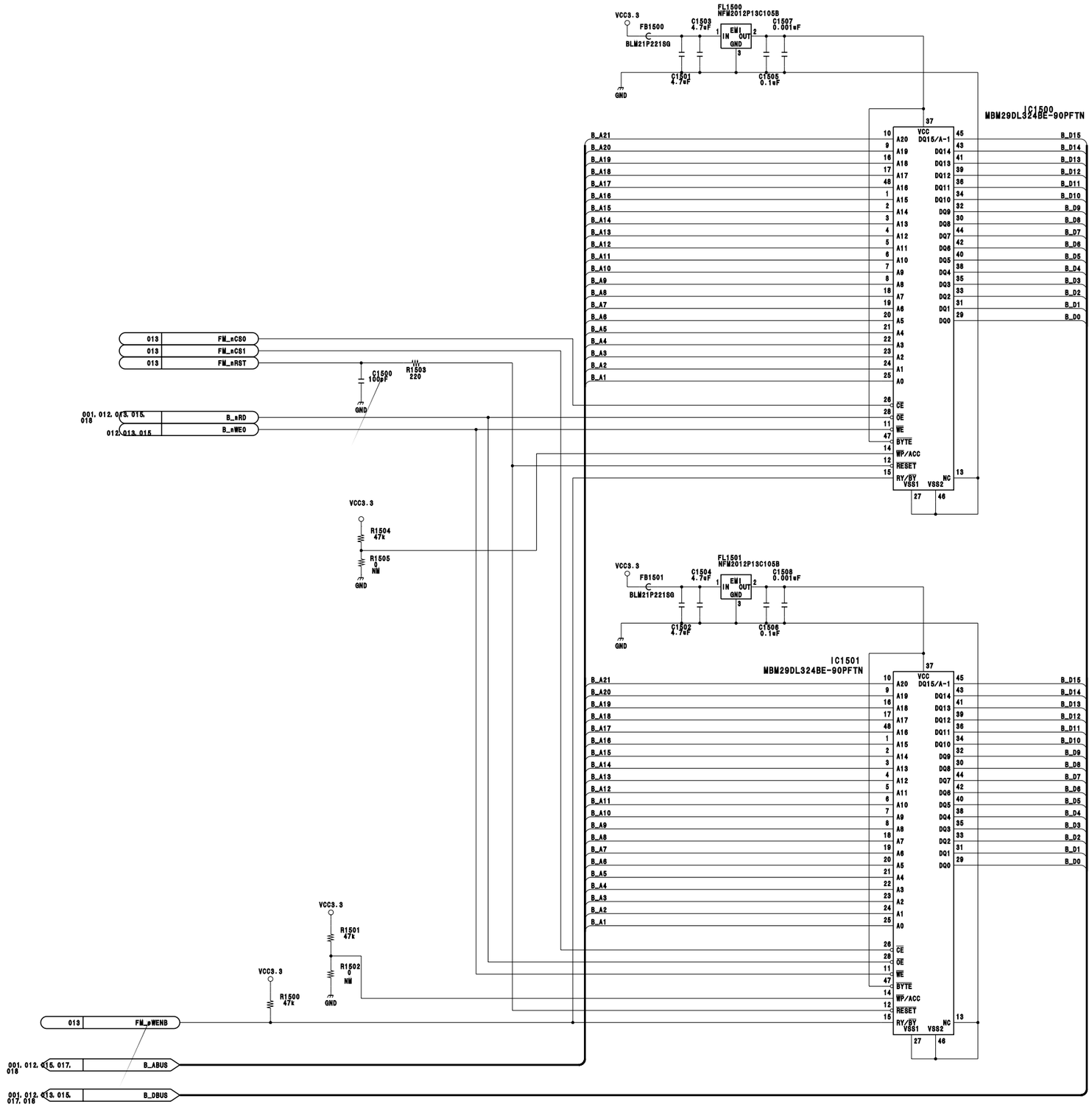

CPU-357 (14/18)

 8-28

 CPU-357 (15/18)

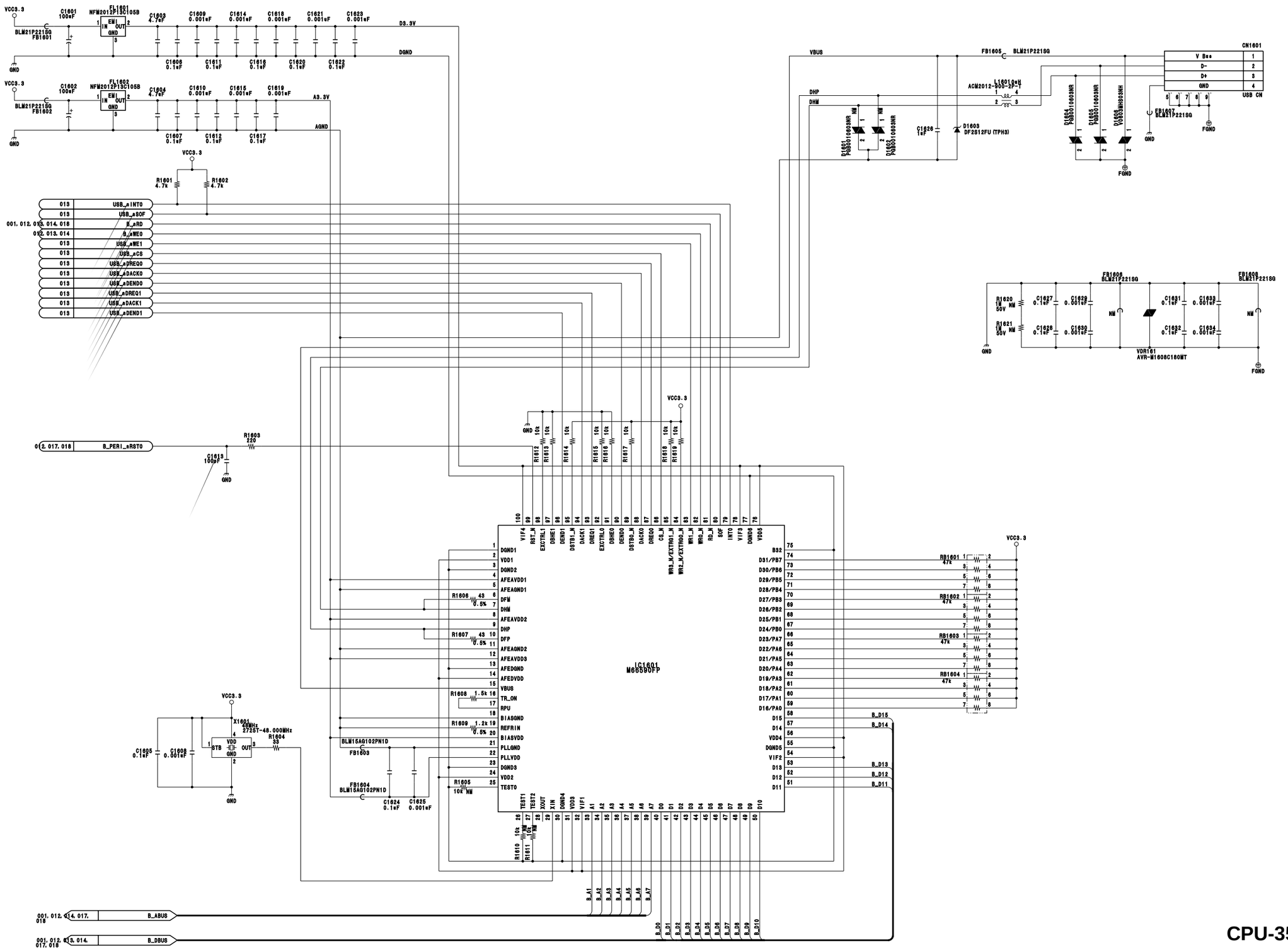

 8-29

 CPU-357 (16/18)

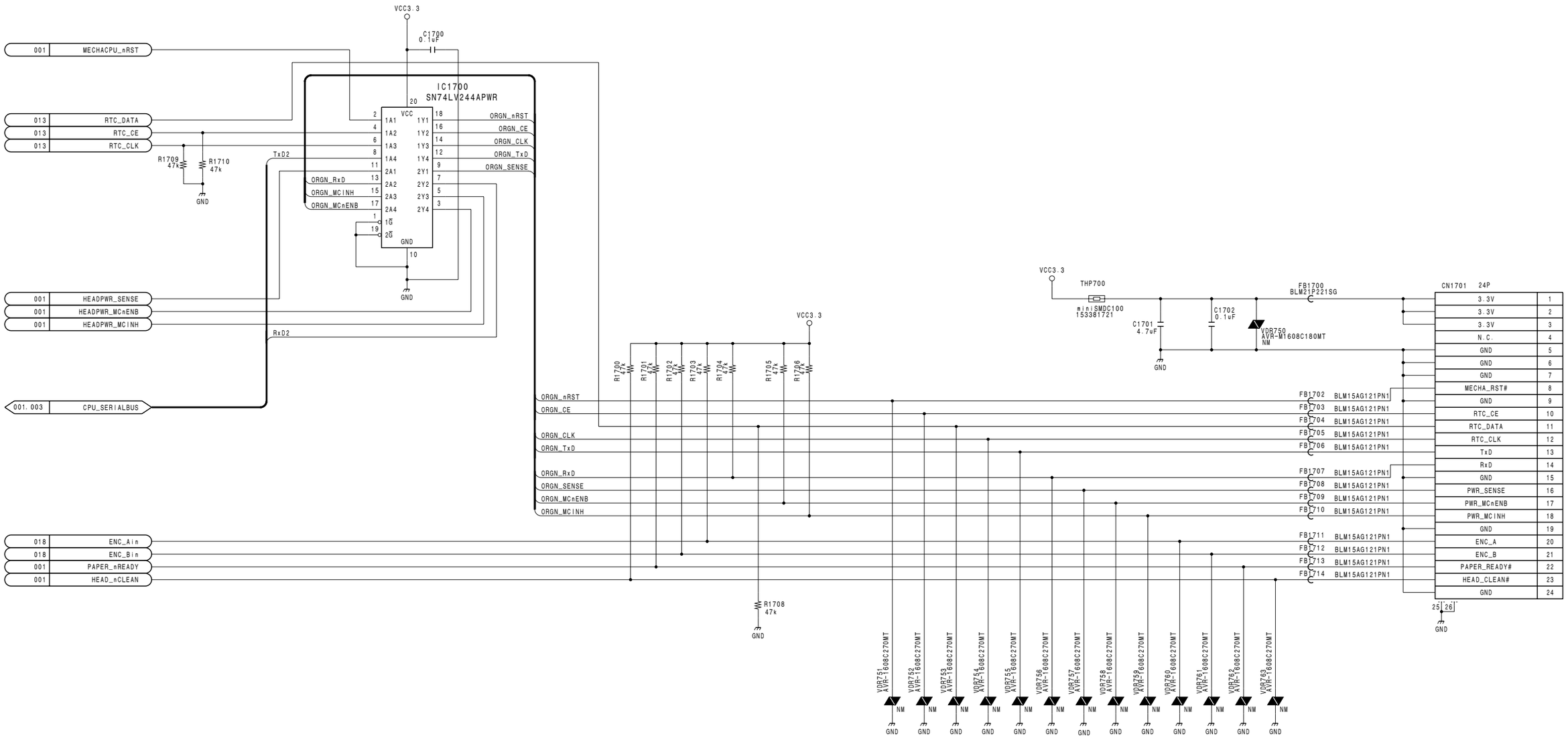

CPU-357 (16/18)

 8-30

 CPU-357 (17/18)

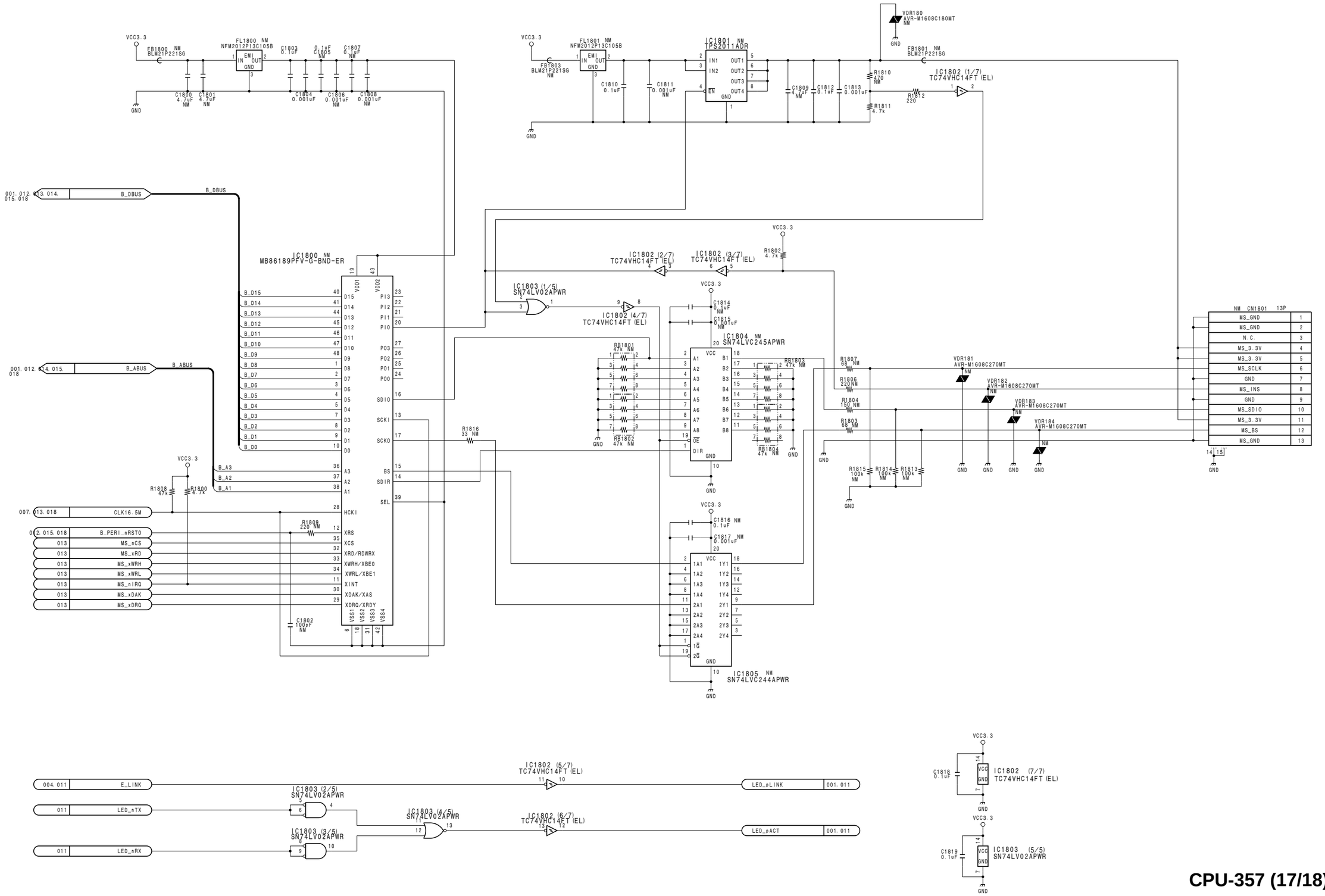
IC1800 NM
MB86189PFV-G-BND-ER
IC1801 NM
TPS2011ADR
IC1802 (1/7)
TC74VHC14FT (EL)
IC1802 (2/7)
TC74VHC14FT (EL)
IC1802 (3/7)
TC74VHC14FT (EL)
IC1802 (4/7)
TC74VHC14FT (EL)
IC1802 (5/7)
TC74VHC14FT (EL)
IC1802 (6/7)
TC74VHC14FT (EL)
IC1802 (7/7)
TC74VHC14FT (EL)
IC1803 (1/5)
SN74LV02APWR
IC1803 (2/5)
SN74LV02APWR
IC1803 (3/5)
SN74LV02APWR
IC1803 (4/5)
SN74LV02APWR
IC1803 (5/5)
SN74LV02APWR
IC1804 NM
SN74LVC245APWR
IC1805 NM
SN74LVC244APWR
NM CN1801 13P
MS_GND 1
MS_GND 2
N.C. 3
MS_3.3V 4
MS_3.3V 5
MS_SCLK 6
GND 7
MS_INS 8
GND 9
MS_SDIO 10
MS_3.3V 11
MS_BS 12
MS_GND 13
B_DBUS
B_ABUS
CLK16.5M
B_PERI_nRSTO
MS_nCS
MS_xRD
MS_xWRH
MS_xWRL
MS_nIRQ
MS_xDAK
MS_xDRQ
E_LINK
LED_nTX
LED_nRX
LED_pLINK
LED_pACT
VCC3.3
GND

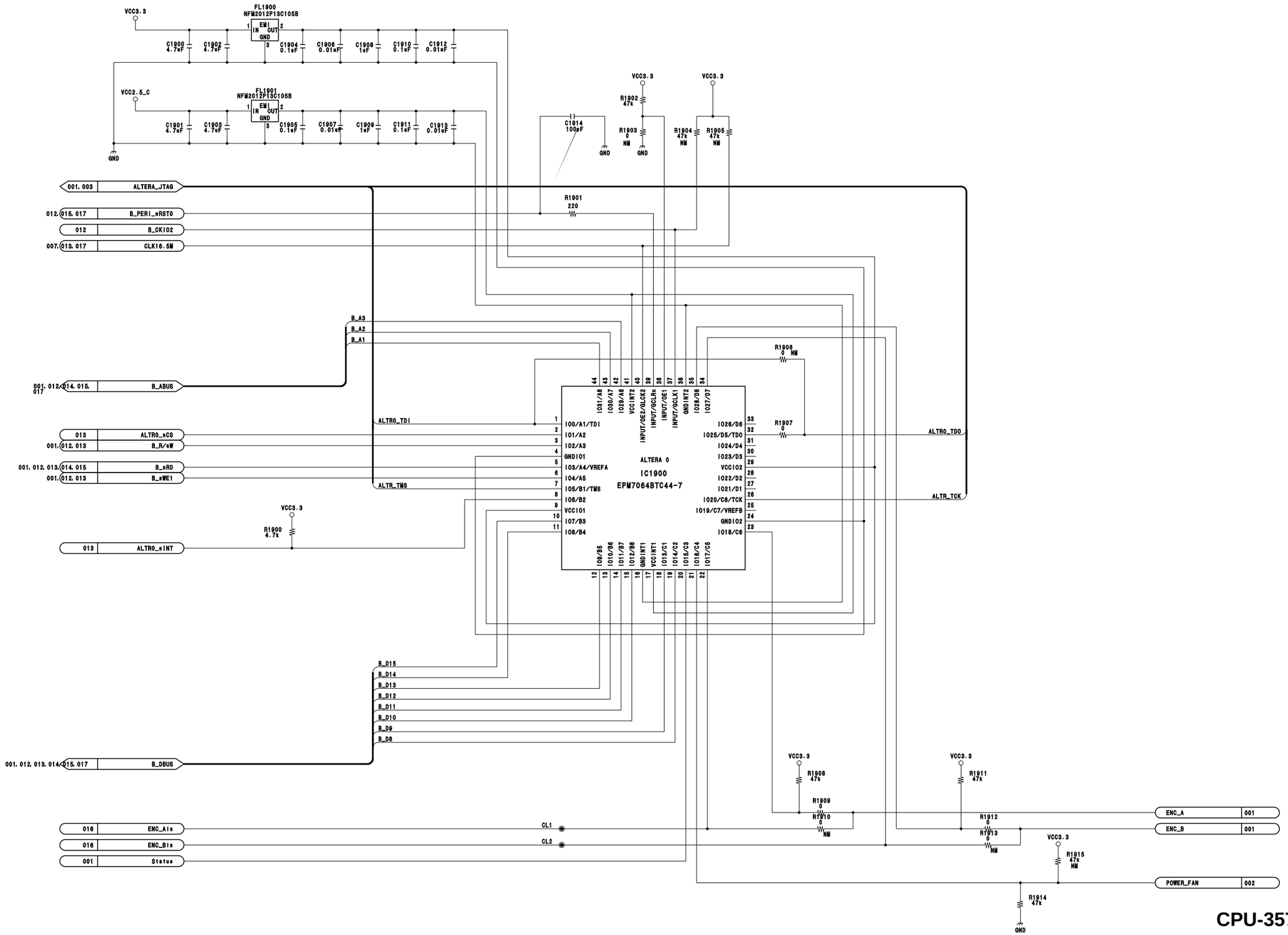
VCC3.3
FL1900
NFM2012P13C105B
EMI
IN
OUT
GND
C1900 4.7uF
C1902 4.7uF
C1904 0.1uF
C1906 0.01uF
C1908 1uF
C1910 0.1uF
C1912 0.01uF
VCC2.5_C
FL1901
NFM2012P13C105B
C1901 4.7uF
C1903 4.7uF
C1905 0.1uF
C1907 0.01uF
C1909 1uF
C1911 0.1uF
C1913 0.01uF
C1914 100pF
R1902 47k
R1903 0 NM
R1904 47k NM
R1905 47k NM
R1901 220
001, 003 ALTERA_JTAG
012, 015, 017 B_PERI_nRST0
012 B_CKIO2
007, 013, 017 CLK16.5M
B_A3
B_A2
B_A1
001, 012, 014, 015, 017 B_ABUS
R1906 0 NM
R1907 0
ALTR0_TDI
013 ALTR0_nCS
001, 012, 013 B_R/nW
001, 012, 013, 014, 015 B_nRD
001, 012, 013 B_nWE1
ALTR_TMS
ALTR0_TDO
ALTR_TCK
ALTERA 0
IC1900
EPM7064BTC44-7
I00/A1/TDI
I01/A2
I02/A3
GNDIO1
I03/A4/VREFA
I04/A5
I05/B1/TMS
I06/B2
VCCIO1
I07/B3
I08/B4
I09/B5
I010/B6
I011/B7
I012/B8
GNDINT1
VCCINT1
I013/C1
I014/C2
I015/C3
I016/C4
I017/C5
I018/C6
GNDIO2
I019/C7/VREFB
I020/C8/TCK
I021/D1
I022/D2
I023/D3
VCCIO2
I024/D4
I025/D5/TDO
I026/D6
I027/D7
I028/D8
GNDINT2
INPUT/GCLK1
INPUT/OE1
INPUT/GCLRn
INPUT/OE2/GCLK2
VCCINT2
I029/A6
I030/A7
I031/A8
R1900 4.7k
013 ALTR0_nINT
B_D15
B_D14
B_D13
B_D12
B_D11
B_D10
B_D9
B_D8
001, 012, 013, 014, 015, 017 B_DBUS
R1908 47k
R1909 0
R1910 0 NM
R1911 47k
R1912 0
R1913 0 NM
R1915 47k NM
R1914 47k
016 ENC_Ain
016 ENC_Bin
001 Status
CL1
CL2
ENC_A 001
ENC_B 001
POWER_FAN 002
GND

CPU-357 (18/18)

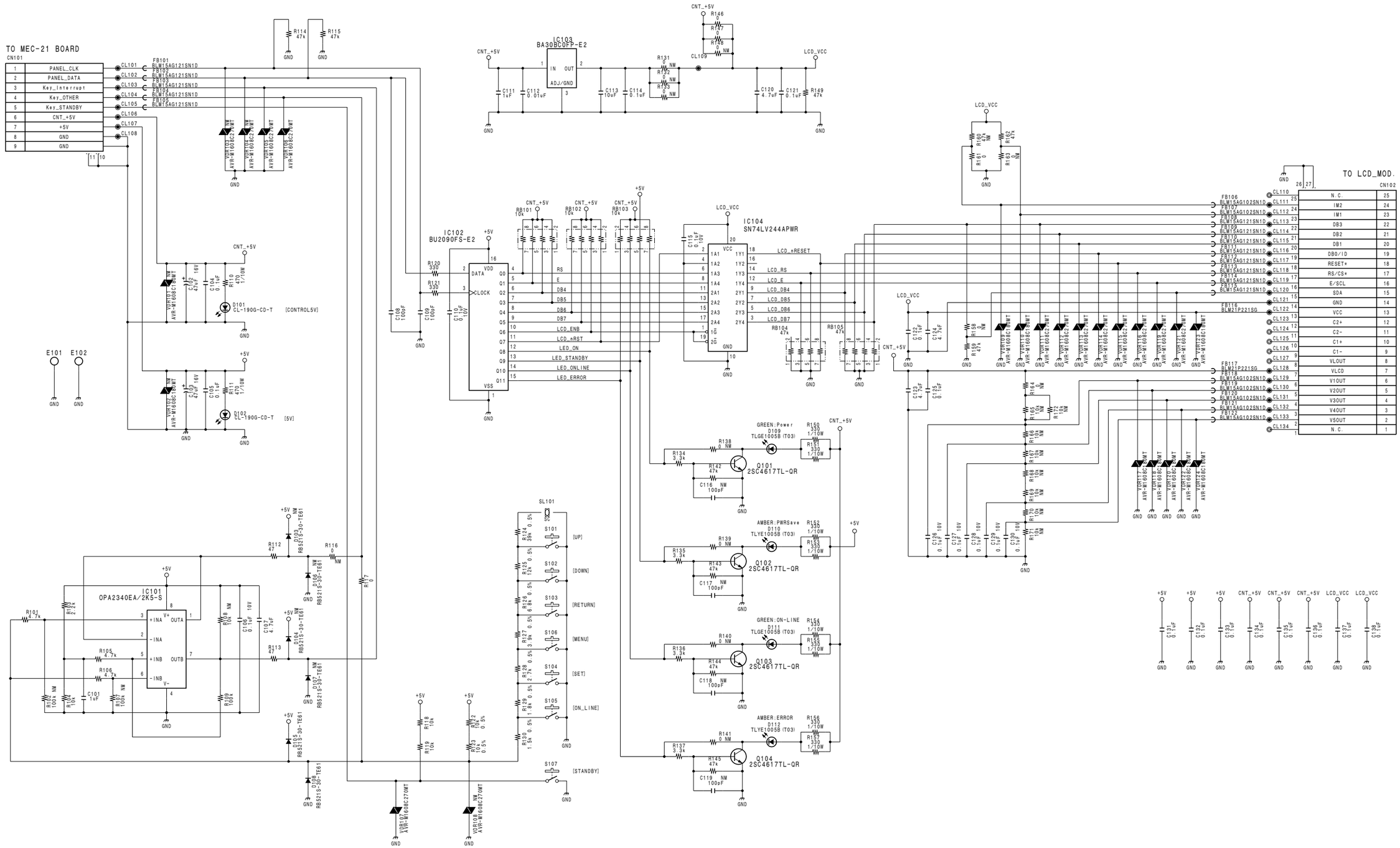
TO MEC-21 BOARD
CN101
PANEL_CLK
PANEL_DATA
Key_Interrupt
Key_OTHER
Key_STANDBY
CNT_+5V
+5V
GND
IC103
BA30BC0FP-E2
IC102
BU2090FS-E2
IC104
SN74LV244APWR
IC101
OPA2340EA/2K5-S
TO LCD_MOD.
CN102
N.C.
IM2
IM1
DB3
DB2
DB1
DB0/ID
RESET*
RS/CS*
E/SCL
SDA
GND
VCC
C2+
C2-
C1+
C1-
VLOUT
VLCD
V1OUT
V2OUT
V3OUT
V4OUT
V5OUT
N.C.
LCD_VCC
LCD_nRESET
LCD_RS
LCD_E
LCD_DB4
LCD_DB5
LCD_DB6
LCD_DB7
RS
E
DB4
DB5
DB6
DB7
LCD_ENB
LCD_nRST
LED_ON
LED_STANDBY
LED_ONLINE
LED_ERROR
[CONTROL5V]
[5V]
GREEN:Power
AMBER:PWRSave
GREEN:ON-LINE
AMBER:ERROR
Q101 2SC4617TL-QR
Q102 2SC4617TL-QR
Q103 2SC4617TL-QR
Q104 2SC4617TL-QR
[UP]
[DOWN]
[RETURN]
[MENU]
[SET]
[ON_LINE]
[STANDBY]

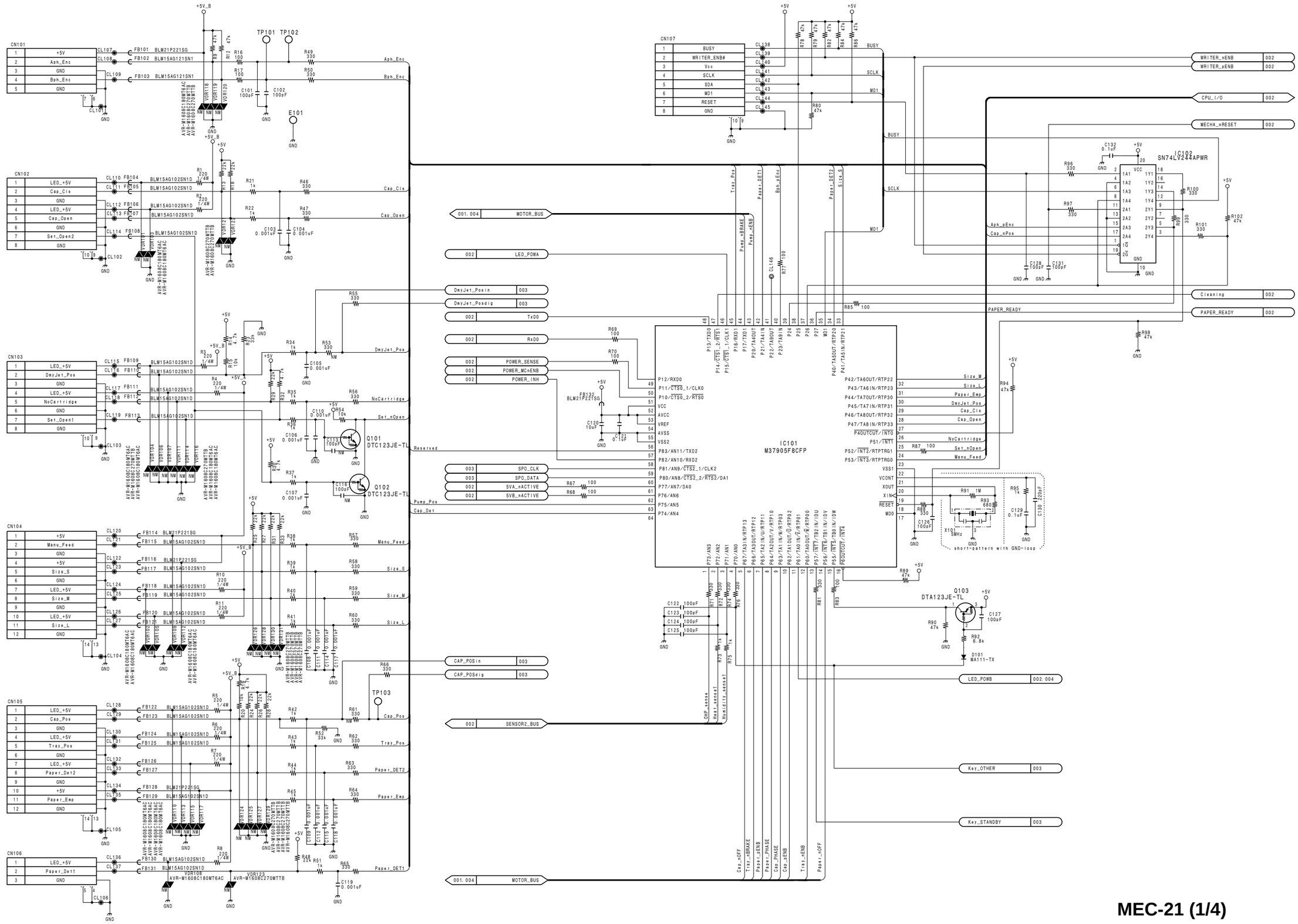
CN101
CN102
CN103
CN104
CN105
CN106
CN107
IC101
M37905F8CFP
IC102
SN74LV244APWR
Q101
DTC123JE-TL
Q102
DTC123JE-TL
Q103
DTA123JE-TL
TP101 TP102
TP103
E101
MOTOR_BUS
LED_POWA
DmyJet_Posin
DmyJet_Posdig
TxD0
RxD0
POWER_SENSE
POWER_MCnENB
POWER_INH
SPO_CLK
SPO_DATA
5VA_nACTIVE
5VB_nACTIVE
CAP_POSin
CAP_POSdig
SENSOR2_BUS
WRITER_nENB
CPU_I/O
MECHA_nRESET
Cleaning
PAPER_READY
LED_POWB
Key_OTHER
Key_STANDBY
short-pattern with GND-loop

 MEC-21 (2/4)

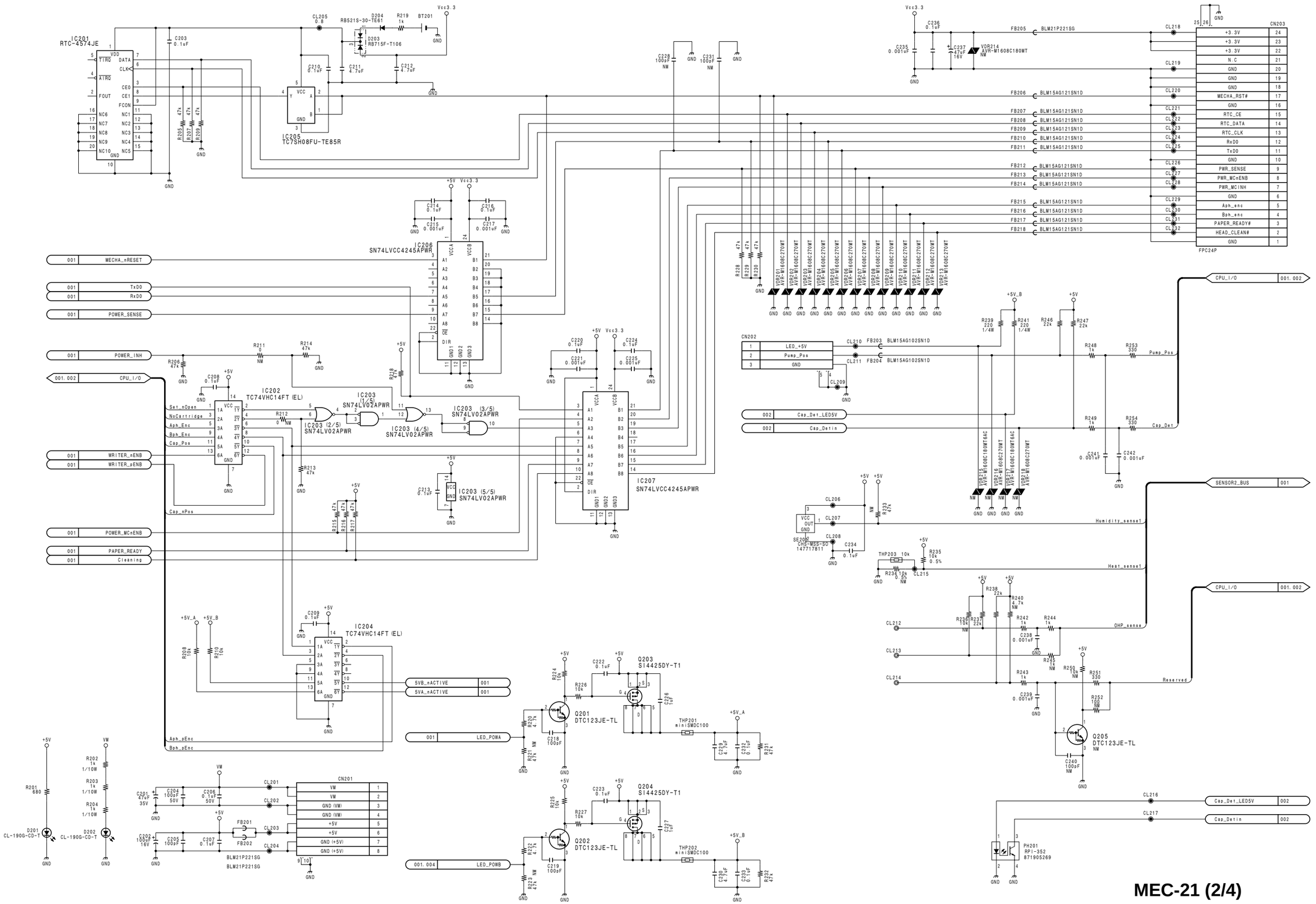
IC201
RTC-4574JE
IC205
TC7SH08FU-TE85R
IC206
SN74LVCC4245APWR
IC202
TC74VHC14FT (EL)
IC203 (1/5)
SN74LVO2APWR
IC203 (2/5)
SN74LVO2APWR
IC203 (3/5)
SN74LVO2APWR
IC203 (4/5)
SN74LVO2APWR
IC203 (5/5)
SN74LVO2APWR
IC207
SN74LVCC4245APWR
IC204
TC74VHC14FT (EL)
Q203
SI4425DY-T1
Q204
SI4425DY-T1
Q201
DTC123JE-TL
Q202
DTC123JE-TL
Q205
DTC123JE-TL
CN203
FPC24P
CN202
CN201
SE202
CHS-MSS-SO
147717611
PH201
RPI-352
871905269
MECHA_nRESET
TxD0
RxD0
POWER_SENSE
POWER_INH
CPU_I/O
WRITER_nENB
WRITER_pENB
POWER_MCnENB
PAPER_READY
Cleaning
LED_POWA
LED_POWB
5VB_nACTIVE
5VA_nACTIVE
Pump_Pos
Cap_Det
Cap_Det_LED5V
Cap_Detin
SENSOR2_BUS
Humidity_sense1
Heat_sense1
OHP_sense
Reserved

 MEC-21 (3/4)

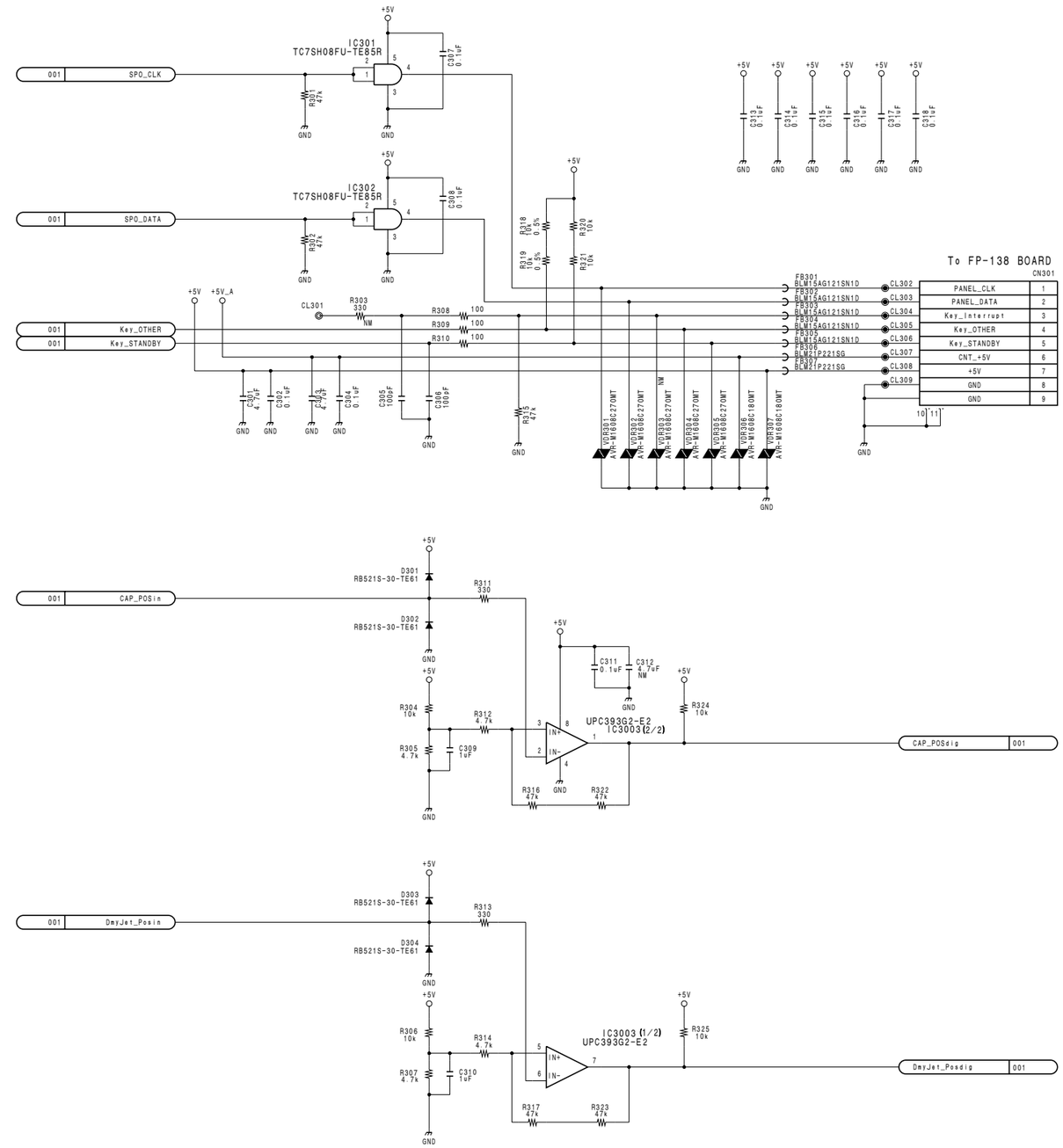
IC301
TC7SH08FU-TE85R
IC302
TC7SH08FU-TE85R
SPO_CLK
SPO_DATA
Key_OTHER
Key_STANDBY
CAP_POSin
DmyJet_Posin
To FP-138 BOARD
CN301
PANEL_CLK
PANEL_DATA
Key_Interrupt
Key_OTHER
Key_STANDBY
CNT_+5V
+5V
GND
GND
CAP_POSdig
DmyJet_Posdig
UPC393G2-E2
IC3003(2/2)
IC3003(1/2)
UPC393G2-E2

 MEC-21 (4/4)

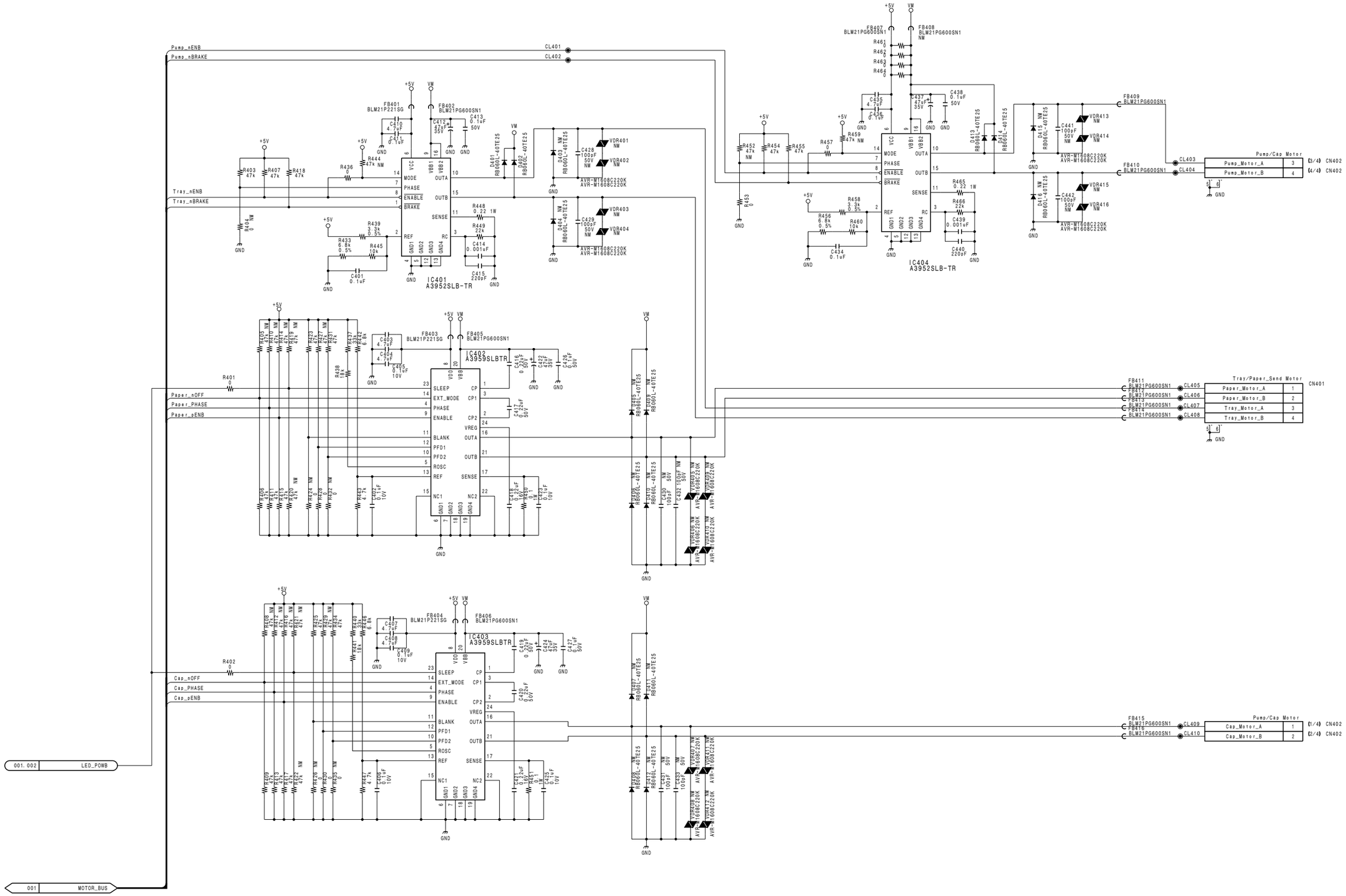

MEC-21 (4/4)

 8-37

 SE-643, SE-644, SE-645, SE-646

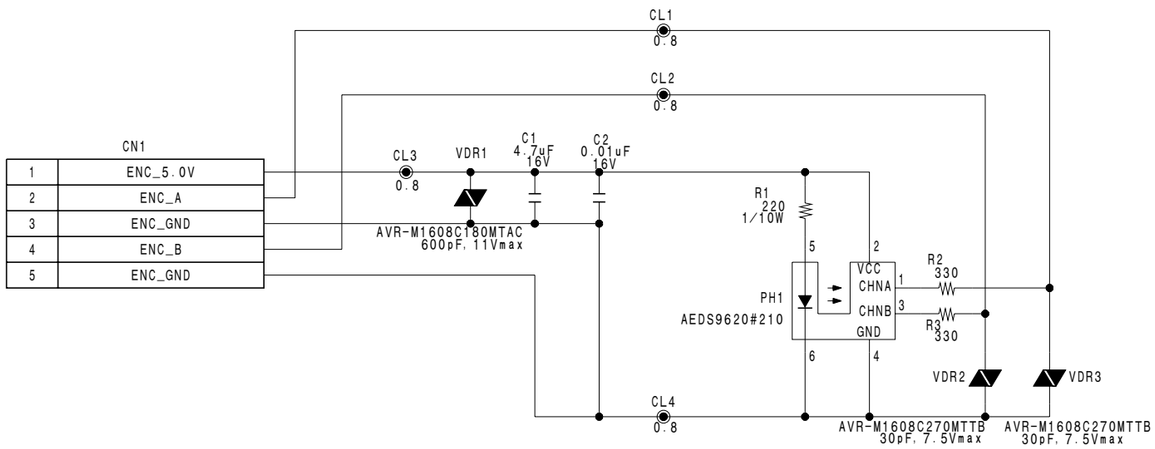

SE-643

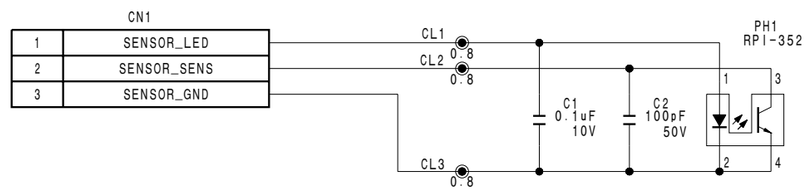

SE-645

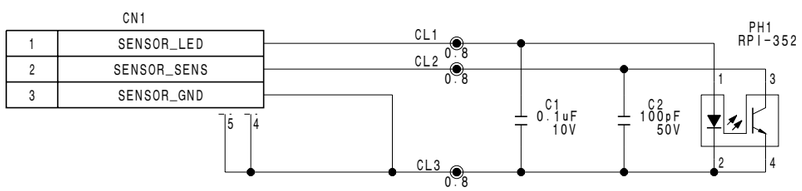

SE-644

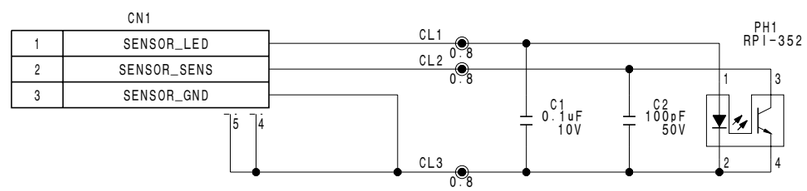

SE-646

 8-38

 SE-673, SE-674, SE-736, SE-737, SW-1105

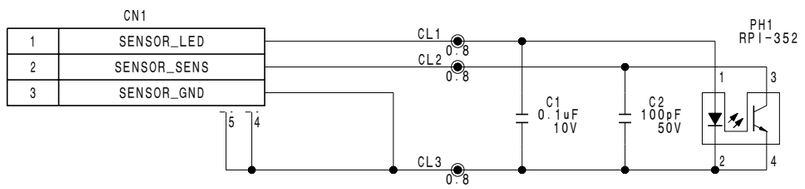

SE-673

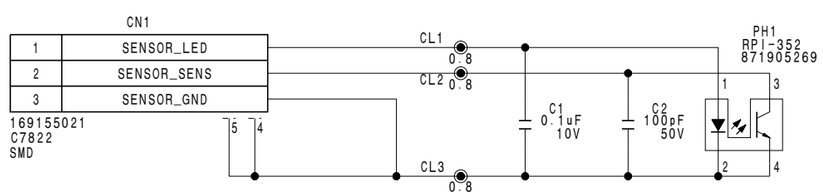

SE-674

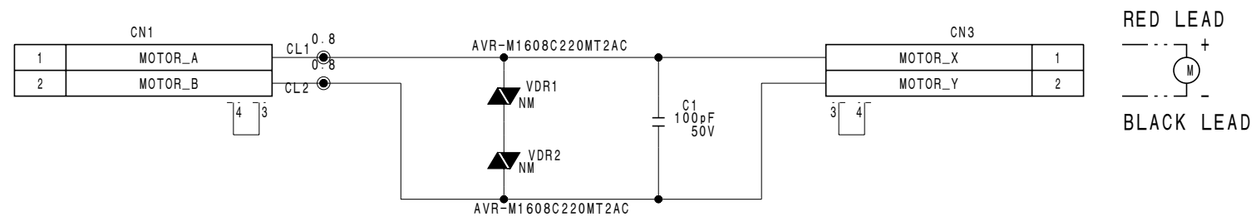

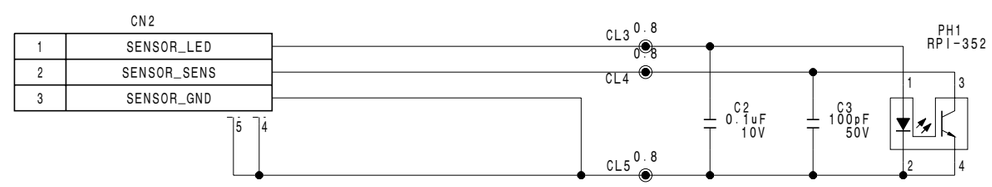

SE-736

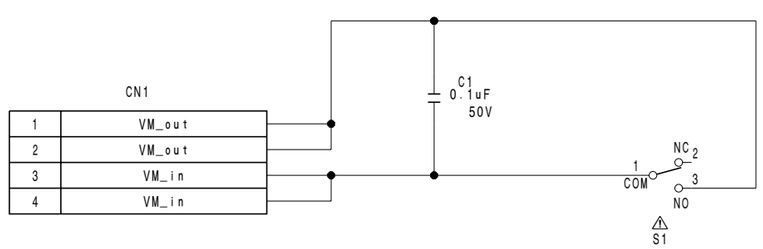

SW-1105

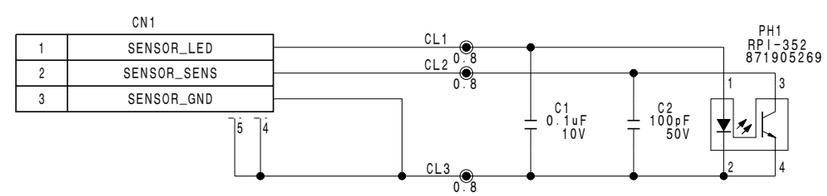

SE-737

8-39

 Frame Wiring

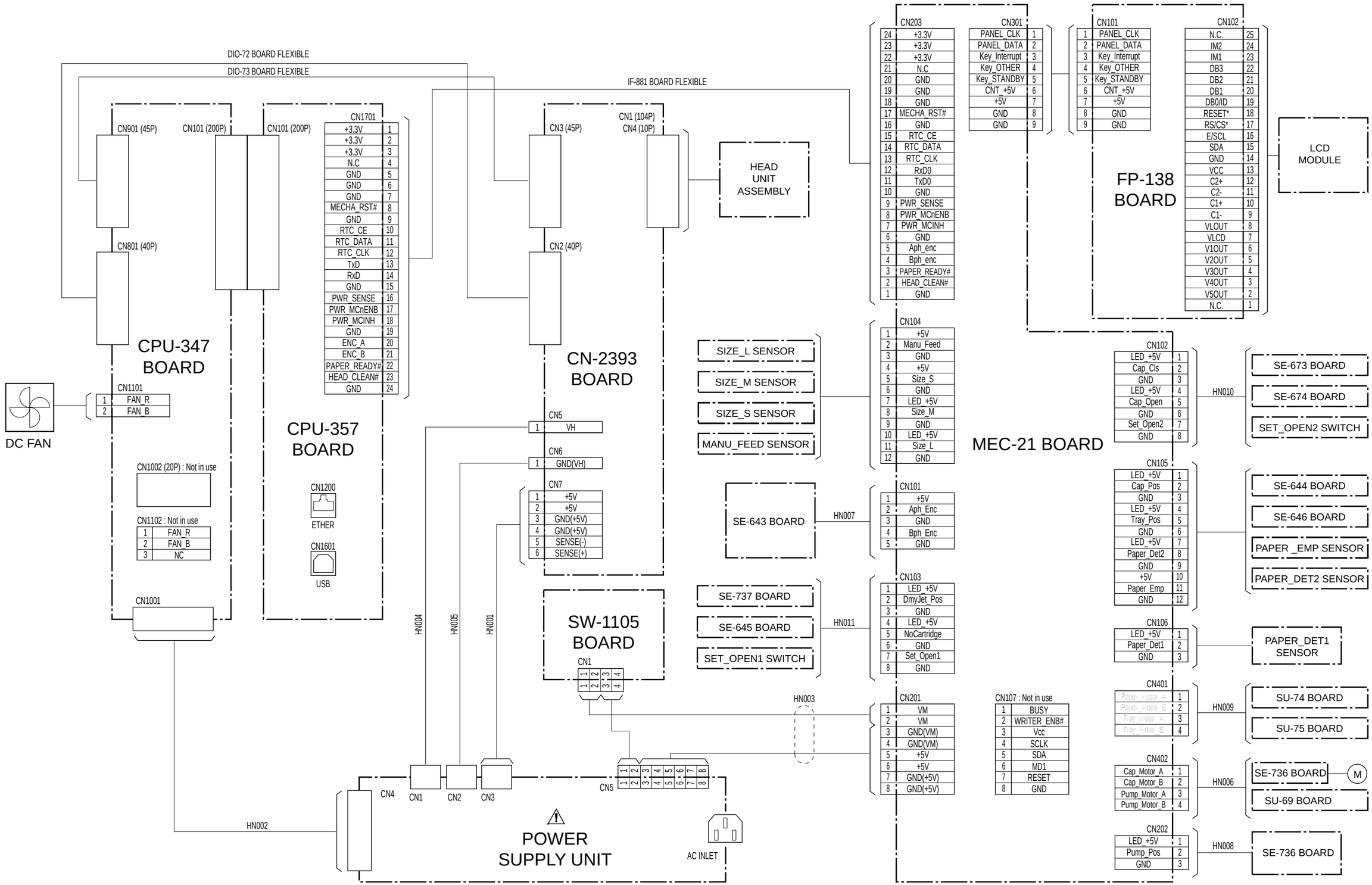

8-2. Board Layouts

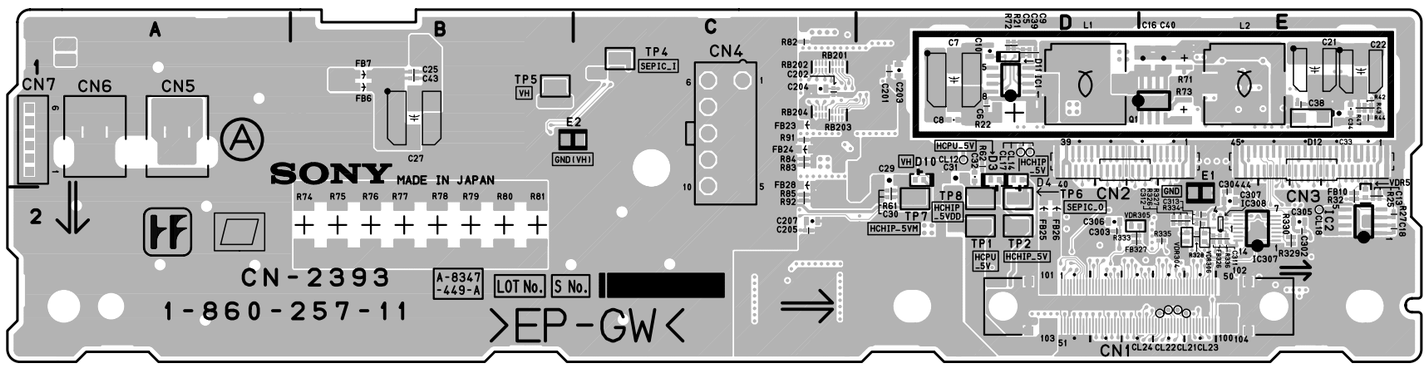

CN-2393 -A SIDE-
SUFFIX: -11

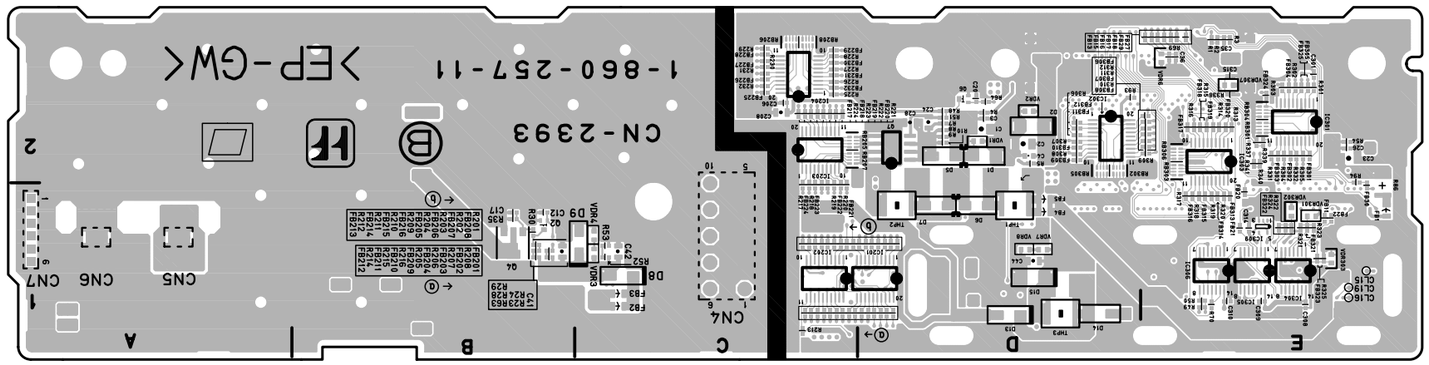

CN-2393 -B SIDE-
SUFFIX: -11

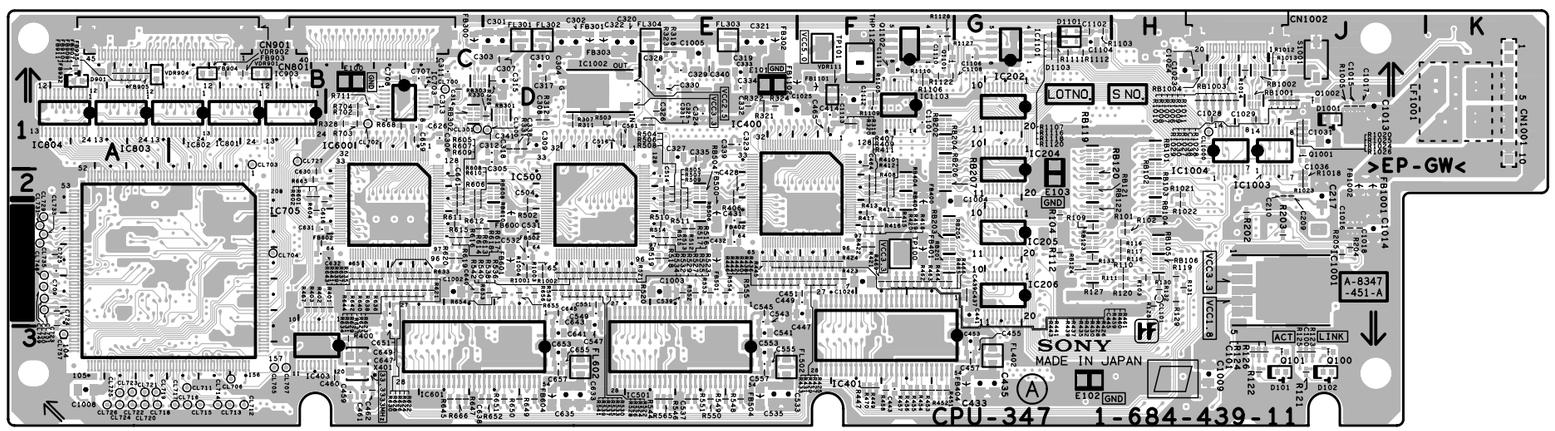

CPU-347 -A SIDE-
SUFFIX: -11

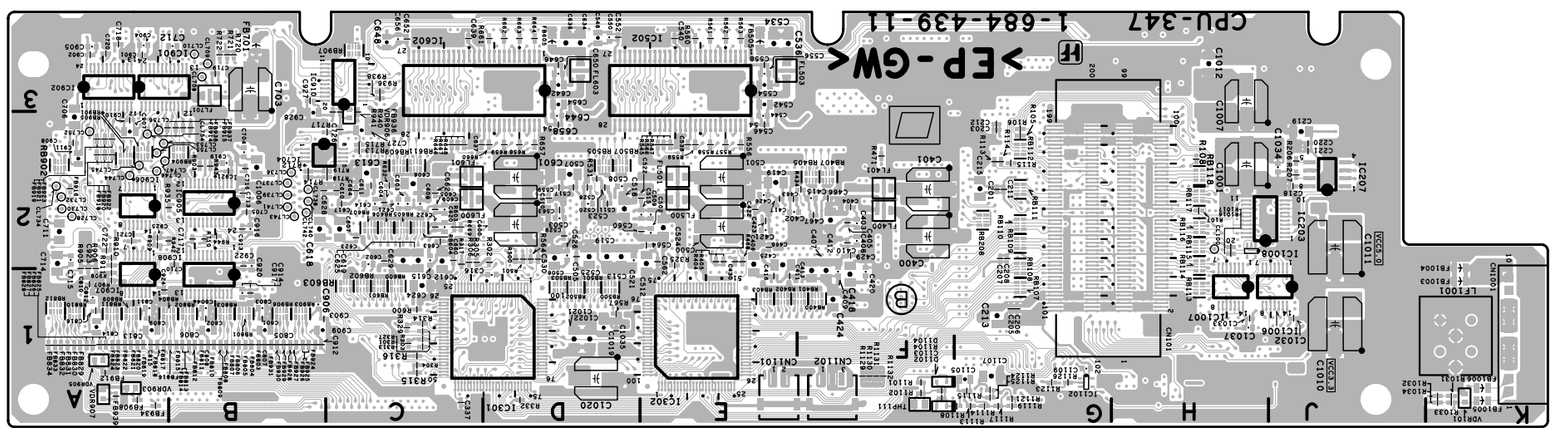

CPU-347 -B SIDE-
SUFFIX: -11

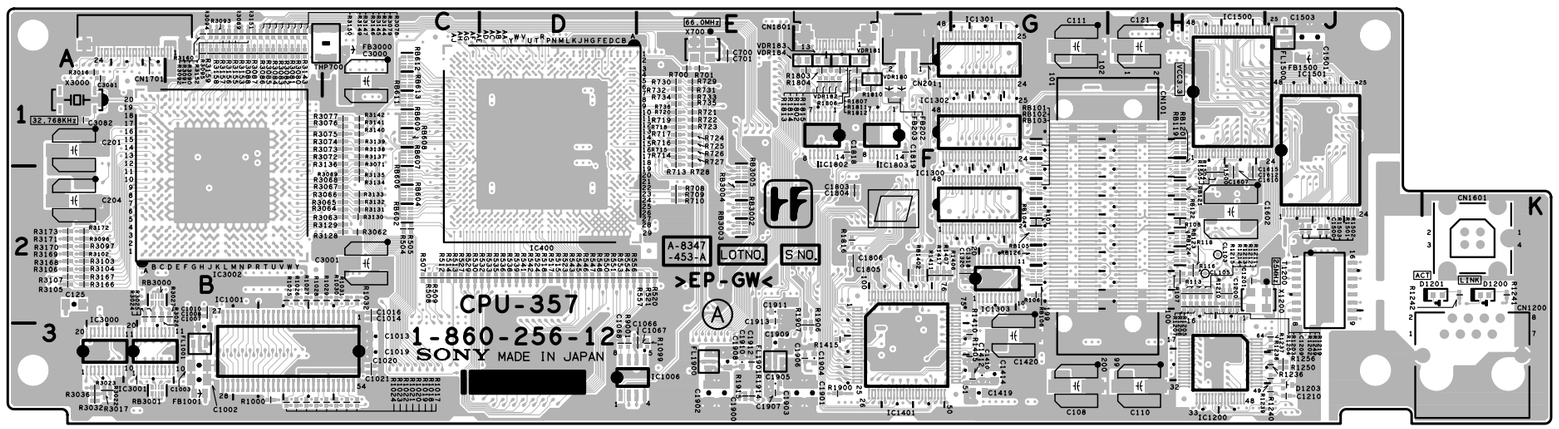

CPU-357 -A SIDE-
SUFFIX: -12

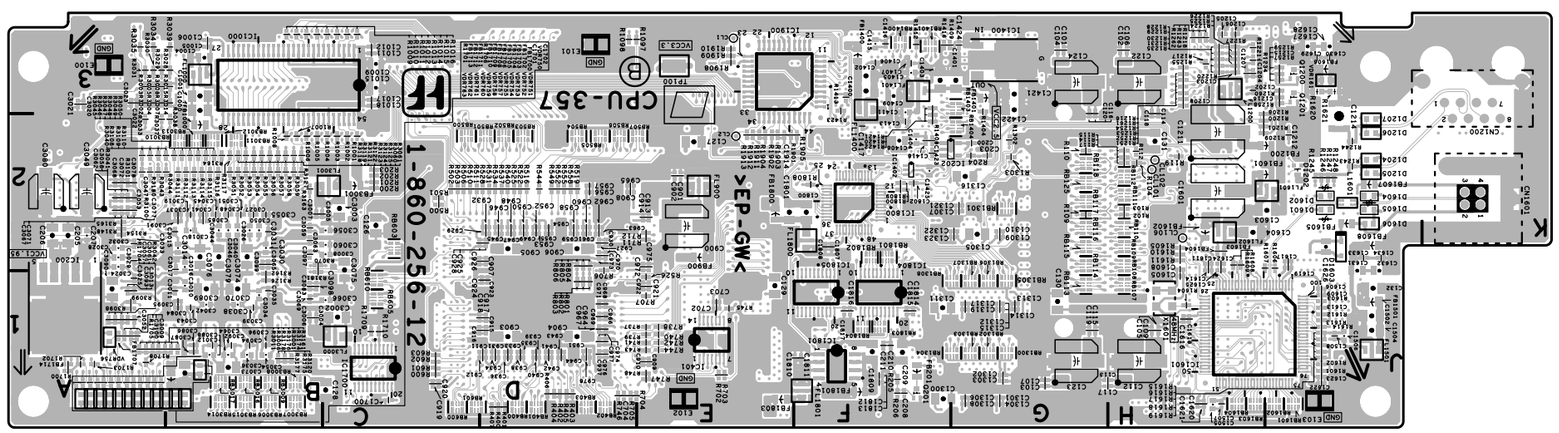

CPU-357 -B SIDE-
SUFFIX: -12

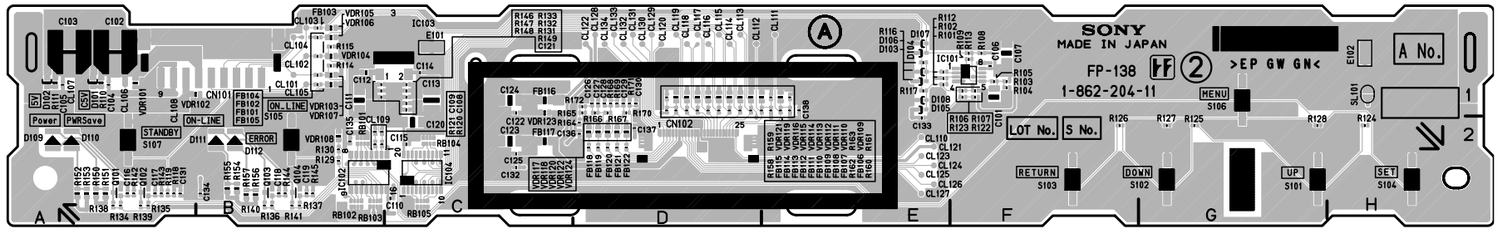

FP-138 -A SIDE-
SUFFIX: -11

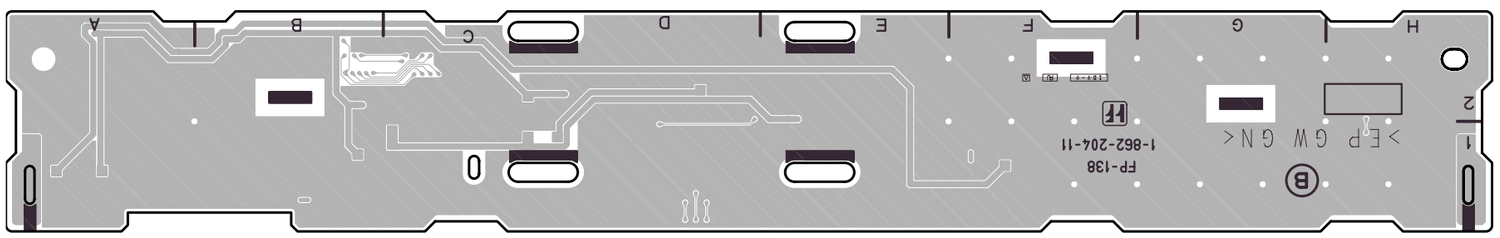

FP-138 -B SIDE-
SUFFIX: -11

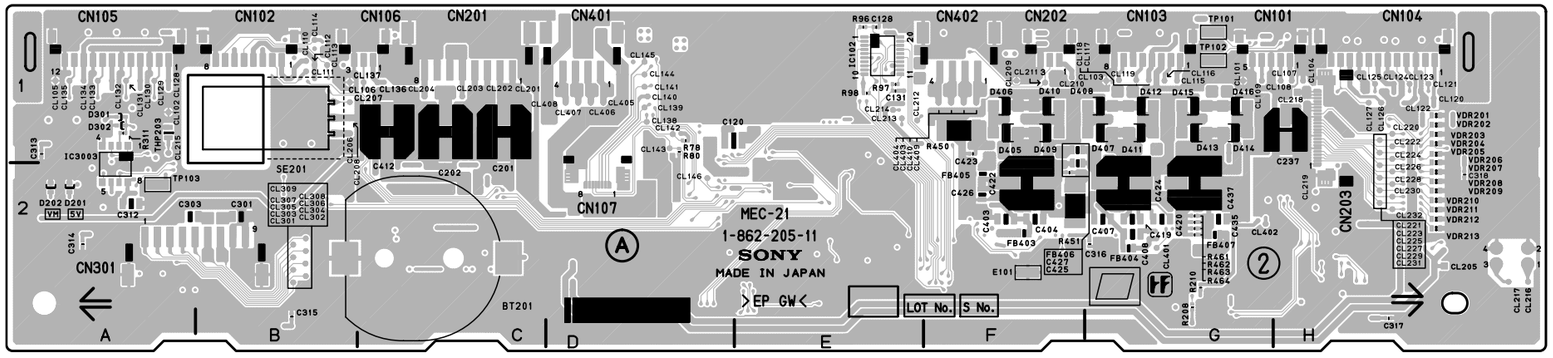

MEC-21 -A SIDE-
SUFFIX: -11

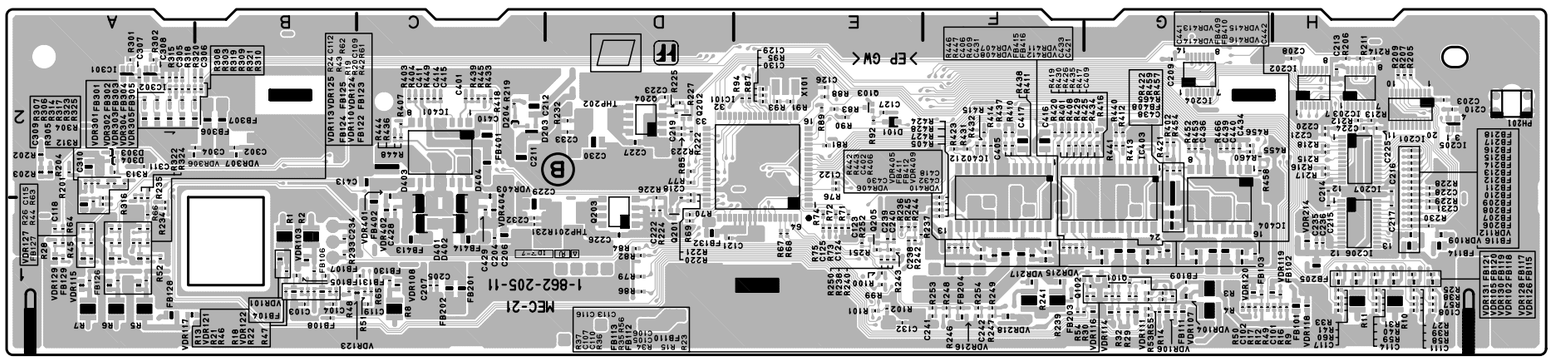

MEC-21 -B SIDE-
SUFFIX: -11

 SE-643, SE-644, SE-645, SE-646, SE-673, SE-674

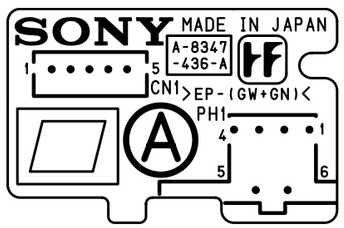

SE-643 -A SIDE-
SUFFIX: -11

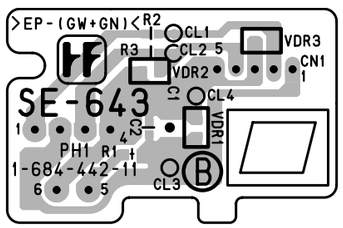

SE-643 -B SIDE-
SUFFIX: -11

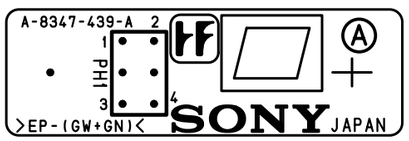

SE-646 -A SIDE-
SUFFIX: -11

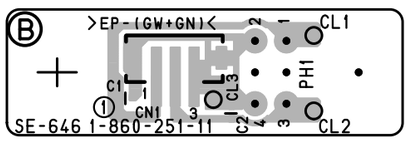

SE-646 -B SIDE-
SUFFIX: -11

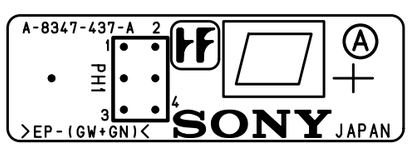

SE-644 -A SIDE-
SUFFIX: -11

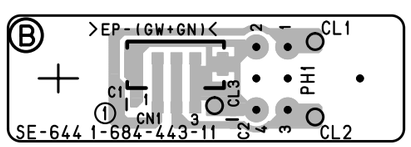

SE-644 -B SIDE-
SUFFIX: -11

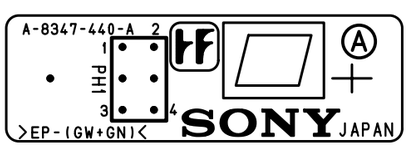

SE-673 -A SIDE-
SUFFIX: -11

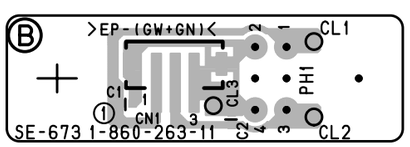

SE-673 -B SIDE-
SUFFIX: -11

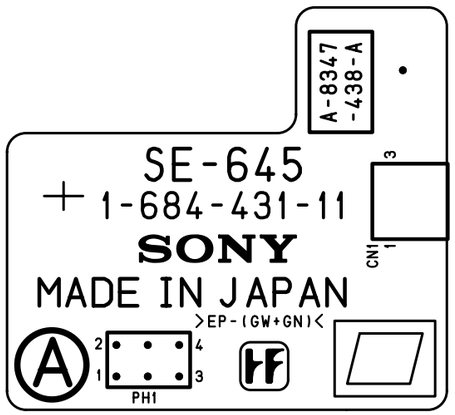

SE-645 -A SIDE-
SUFFIX: -11

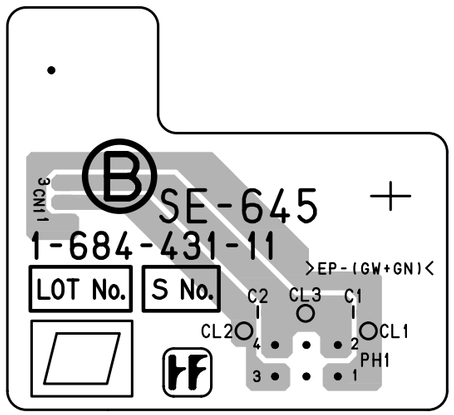

SE-645 -B SIDE-
SUFFIX: -11

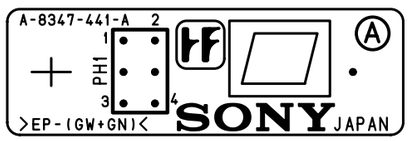

SE-674 -A SIDE-
SUFFIX: -11

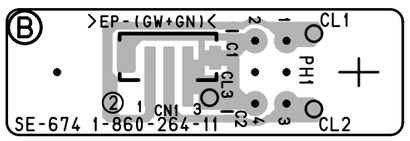

SE-674 -B SIDE-
SUFFIX: -11

 8-46

 SE-736, SE-737, SW-1105

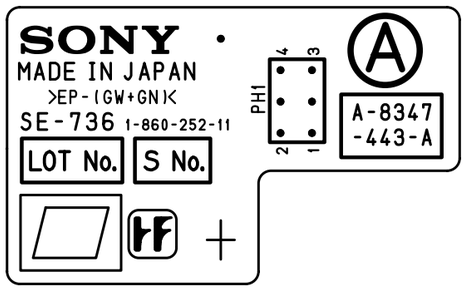

SE-736 -A SIDE-
SUFFIX: -11

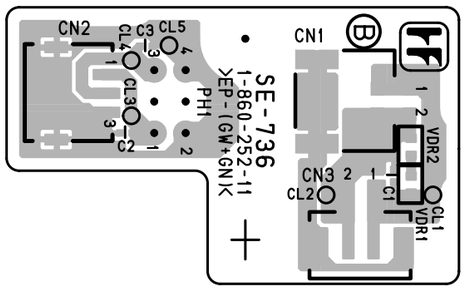

SE-736 -B SIDE-
SUFFIX: -11

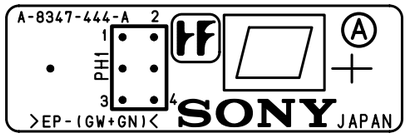

SE-737 -A SIDE-
SUFFIX: -11

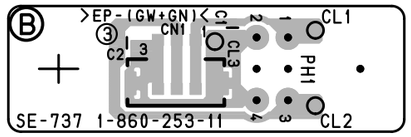

SE-737 -B SIDE-
SUFFIX: -11

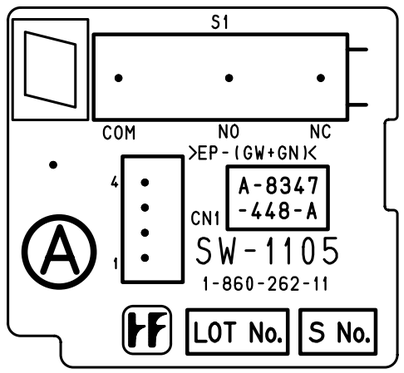

SW-1105 -A SIDE-
SUFFIX: -11

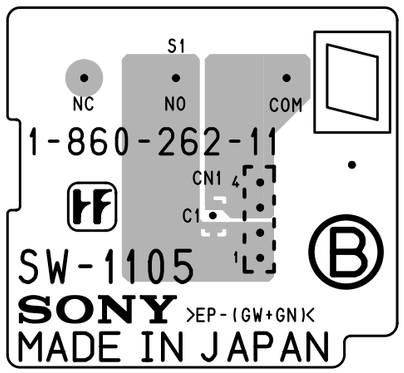

SW-1105 -B SIDE-
SUFFIX: -11

 8-47

LPR-1000MD (CE) E
9-877-807-11

Sony Corporation
Home Audio Company
Published by Sony Engineering Corporation

2004. 7 22
©2004